Product Specifications

Customer	
Model Name	**NTWP101-2 V612E**
Model Number	**NTWP101HX2XX-SIXXXXX-XX02-612E ***

* X = A-Z, 0-9 (Varies by options)

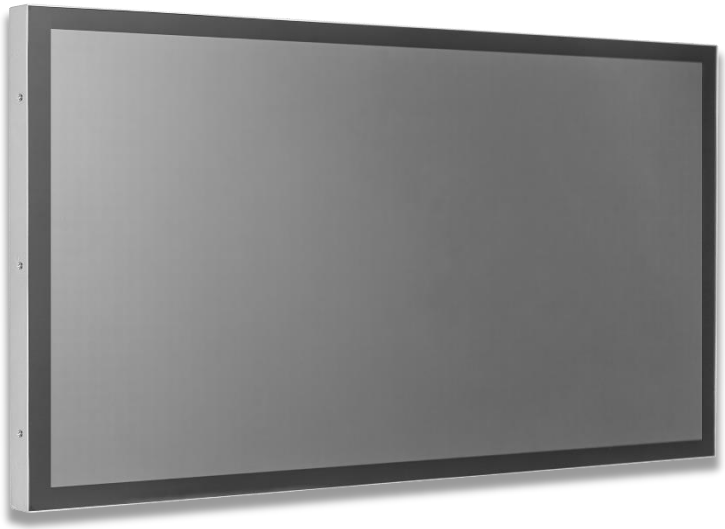

Records of Revision			
Vision	**Modifying**	**Old Description**	**New Description**
v2611.1	**Initial release**		

Key Features

PSE BSMI RoHS CE ISO9001 FCC

- ★ 10.1 inch Industrial LCD Panel, 1280x800 Resolution
- ★ 1000nits High Brightness
- ★ Wide-temperature LCD panel, operating temperature -20-70°C
- ★ Intel® Alder Lake N95/N97 CPU
- ★ DDR4 8G RAM, Max to 16G
- ★ GbE LAN Port x2
- ★ 128G SSD, Max to 1T
- ★ HDMI Output x1, DP output x1
- ★ Realtek Audio HAD Codec,
- ★ USB 3.0 x4, USB 2.0 x2
- ★ Narrow-bezel true-flat PCAP touch screen
- ★ 7H Hardness tempered cover glass
- ★ 10-point multi-touch , supports Nextech stylus
- ★ Metal housing with multiple mounting options
- ★ Made in Taiwan, 3-year warranty, designed for harsh environments
- ★ Optional Privacy filter or antimicrobial surface treatment

Desktop Stand

Wall Mounting

Panel Mount

System Specifications

CPU	**Intel® Alder Lake-N Processor**
Memory	**DDR4 SO-DIMM 8G, Max to 16G**
Network	**Intel i210-AT GbE Ethernet Controller x1** **Intel i226-V GbE Ethernet Controller x1**
Storage	**M.2 M-Key 2280, PCIE X1/SATA, Support PCIE X1 NVMe/SATA SSD, Auto Detect SATA3.0 6Gbps**
Sound Chip	**Realtek Audio HAD Codec**
Rear I/O	**HDMI x1, DP x1** **RJ45 LAN Ports x2** **USB 3.0 x4, USB 2.0 x2** **Line-Out + MIC 2in1 3.5mm Jack x1**
Power Input	**12VDC-in**

Display Specifications

Screen Diagonal	**10.1 inch**	Response Time	**25 msec.**
Active Area	**216.96x135.6 mm**	Display Mode	**Normally Black**
Resolution	**1280x800**	Backlight Unit	**White LED**
Contrast Ratio	**1300:1**	Viewing Angle (L/R, U/D)	**170°/170° (CR≥10)**
Display Ratio	**16:10**	Backlight Lifetime	**>50,000 Hours**
Colors	**16.2M Colors**	Operating Temp.	**-20~70℃**
Pixel Pitch	**0.1695x0.1695 mm**	Storage Temp.	**-30~70℃**
Brightness	**1000nits**		

Touch Options

Configuration	Specification	Ordering Information
Standard	**Projected Capacitive Touch**	**NTWP101HP2XX-SIXXXXX-XX02-612E**
Optional	No touch	NTWP101H02XX-SIXXXXX-XX02-612E

PCAP Touch Specifications

Allowed Touch Points	10 points	Thickness of Cover Lens	1.1±0.2mm
Transparency	≧87%	Hardness of Cover Lens	7H
Accuracy	99.00%	IK Ratings	IK07

Surface Treatment Options

Surface Treatment Options		
Configuration	**Specification**	**Ordering Information**
Standard	**Glare Type**	**NTWP101HX200-SIXXXXX-XX02-612E**
Optional	Anti-Glare & UV-resistant Coating	NTWP101HX2GG-SIXXXXX-XX02-612E
Optional	Antibacterial (AB Film)	NTWP101HX2AB-SIXXXXX-XX02-612E
Optional	Privacy filter (AS Film)	NTWP101HX2SF-SIXXXXX-XX02-612E

System Options

CPU		
Configuration	**Specification**	**Ordering Information**
Standard	**Alder Lake-N95**	**NTWP101HX2XX-SI31XXX-XX02-612E**
Optional	Alder Lake-N97	NTWP101HX2XX-SI51XXX-XX02-612E

Memory		
Configuration	**Specification**	**Ordering Information**
Standard	**DDR4 SO-DIMM 8G**	**NTWP101HX2XX-SIXX8XX-XX02-612E**
Optional	DDR4 SO-DIMM 16G	NTWP101HX2XX-SIXXAXXX-XX02-612E

Storage		
Configuration	**Specification**	**Ordering Information**
Standard	**SSD 128G**	**NTWP101HX2XX-SIXXXS1-XX02-612E**
Option 1	SSD 256G	NTWP101HX2XX-SIXXXS2-XX02-612E
Option 2	SSD 512G	NTWP101HX2XX-SIXXXS3-XX02-612E
Option 3	SSD 1TB	NTWP101HX2XX-SIXXXS4-XX02-612E

Housing Options

Housing Material		
Configuration	**Specification**	**Ordering Information**
Standard	**SECC**	**NTWP101HX2XX-SIXXXXX-SX02-612E**
Optional	Stainless Steel	NTWP101HX2XX-SIXXXXX-LX02-612E
Optional	Aluminum	NTWP101HX2XX-SIXXXXX-AX02-612E

Housing Color		
Configuration	**Specification**	**Ordering Information**
Standard	**Silver**	**NTWP101HX2XX-SIXXXXX-XS02-612E**
Optional	White	NTWP101HX2XX-SIXXXXX-XW02-612E
Optional	Black	NTWP101HX2XX-SIXXXXX-XB02-612E
Optional	Custom Color	NTWP101HX2XX-SIXXXXX-XX02-612E *

* X = A~Z, 0~9 (Varies by Color)

Nextech Stylus Option

Tip	Passive conductive metal mesh
Tip Diameter	6mm
Magnetic Attachment	Yes

Optional Mounting Accessories

	Accessories	Description
Optional	Desktop stand	For desktop use
Optional	Panel mount kit	For front mounting into kiosks, cabinets, or equipment panels.
Optional	Open-frame brackets	For rear mounting installation inside kiosks, cabinets, or equipment panels.
Optional	Wall Mount Bracket	For wall mounting

Desktop Stand Type L (Optional)

Item	L Stand	Model	DST-0B004/DST-1B004
VESA Mount	100x100 / 75x75 mm	Dimensions	194x194x222 mm
Material	SECC	Net Weight	1.4 kg
Tilt Angle	105°	Load Capacity	15 kg

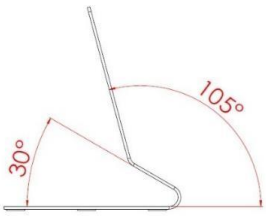

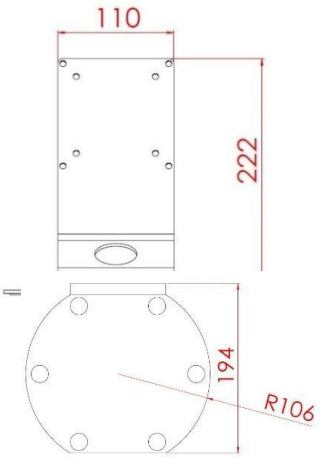

Desktop Stand Type B (Optional)

Item	B Stand	Model	DST-0B002/DST-1B002
VESA Mount	100x100 / 75x75 mm	Dimensions	203x275x227 mm
Material	Steel/Plastic/Aluminum	Net Weight	1.8 kg
Tilt Angle	-2° ~+180°	Load Capacity	15 kg

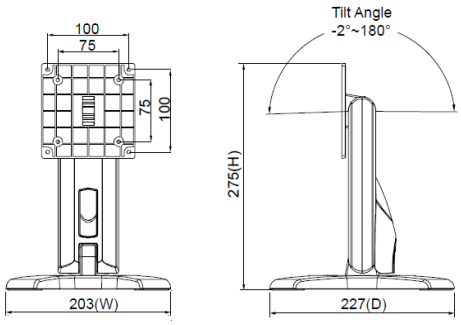

Panel Mount Kits (Option)

Panel Mount Installation Dimensions

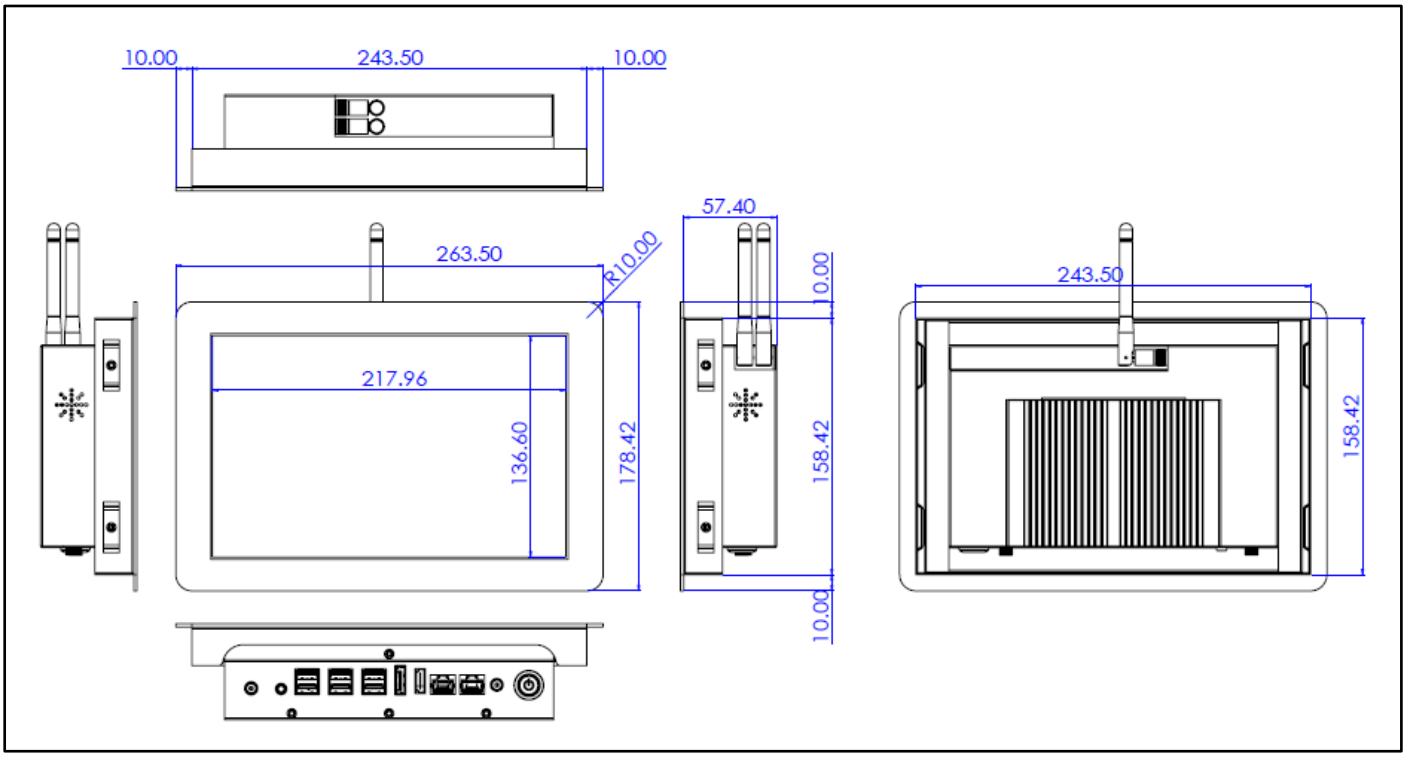

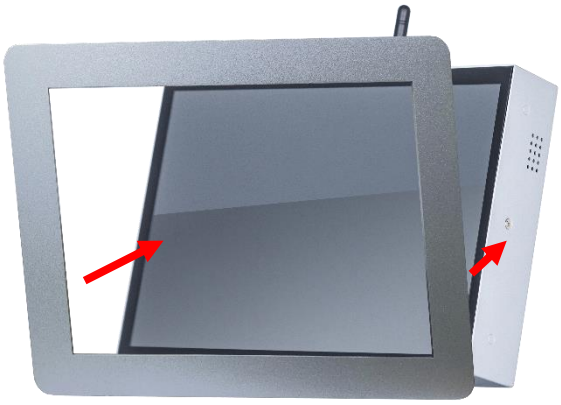

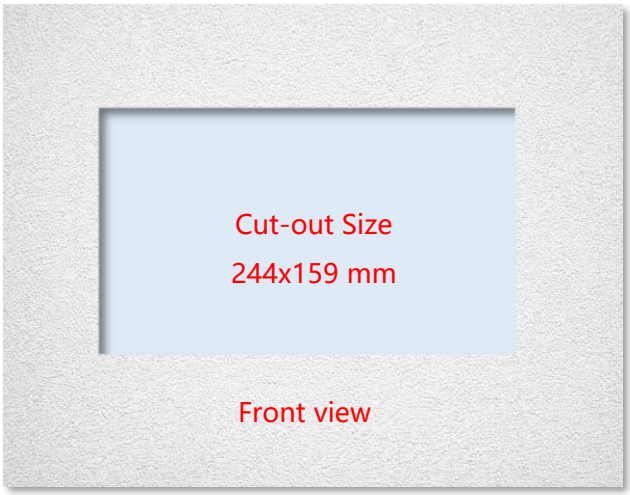

Step 1

Assemble the front module with the display unit.

(This step is pre-assembled at Nextech's factory.)

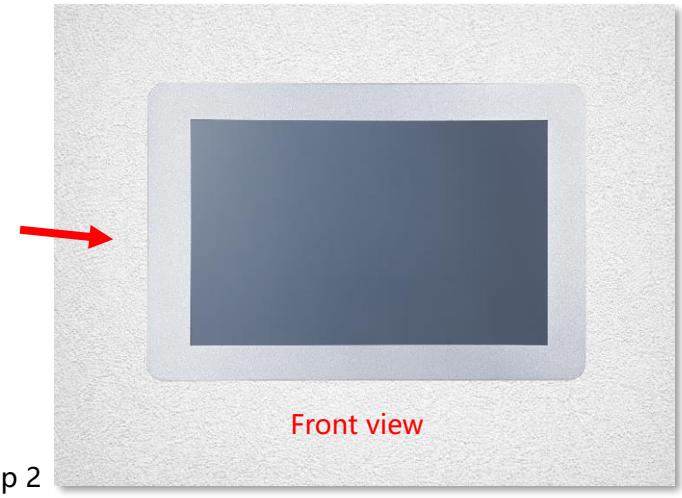

Step 2

Insert the display into the cut-out from the front.

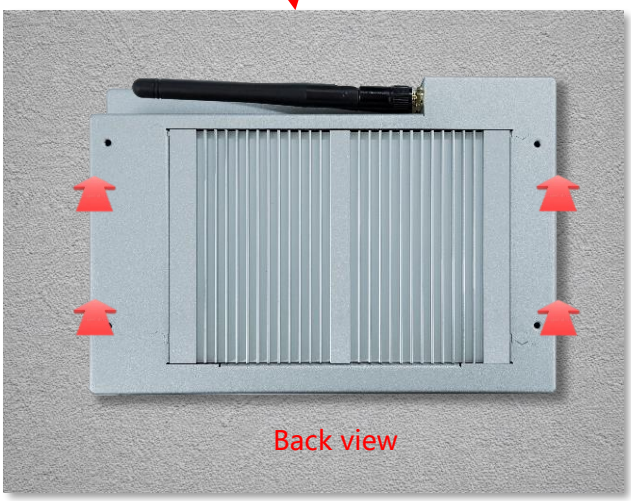

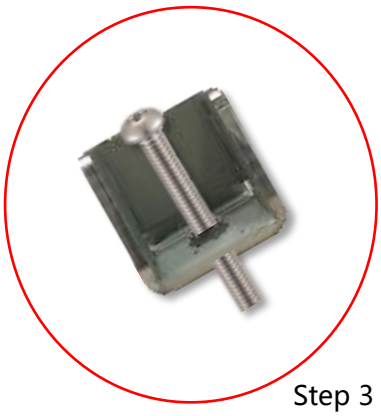

Step 3

Install the mounting clips from the rear side and secure them with screws.

Wall Mount Bracket (Optional)

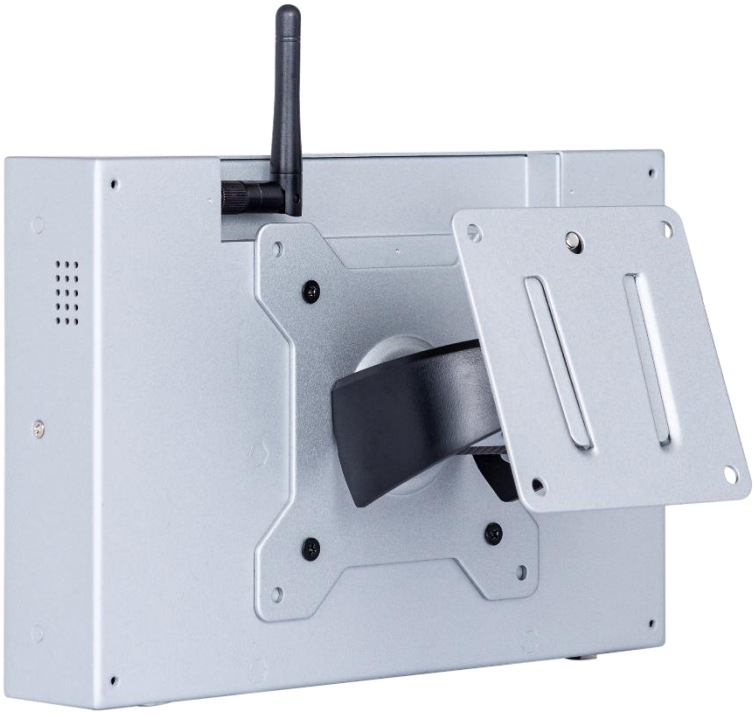

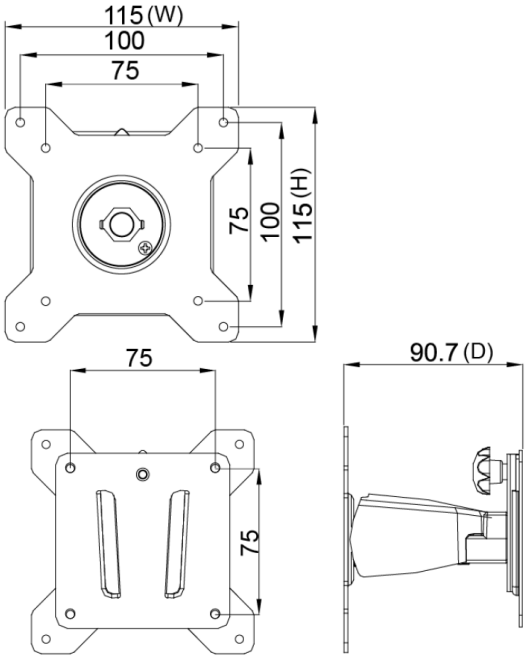

Packing Information

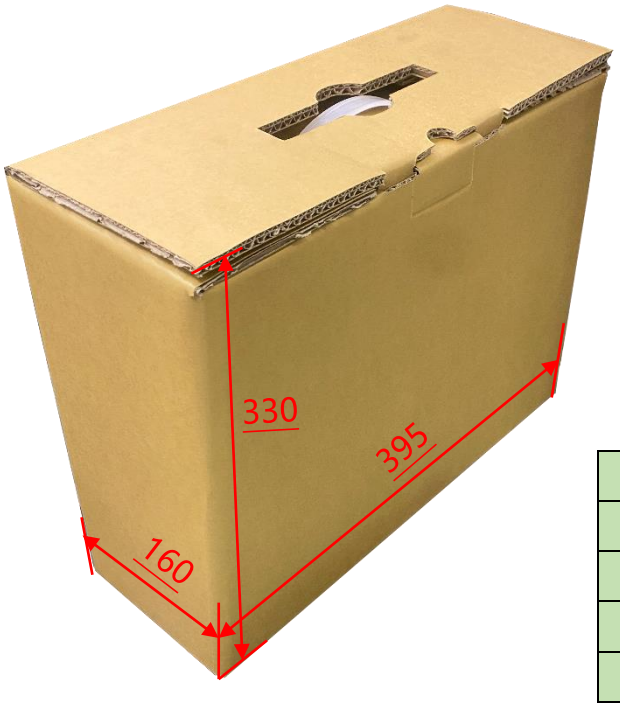

Carton Dimensions	**395x160x330 mm**
Net Weight	**≦1.7 kg**
Gross Weight	**≦3.4 kg**
Units per Pallet	**72 units**
Pallet Size	**120x100x142 cm**

Input /Output System

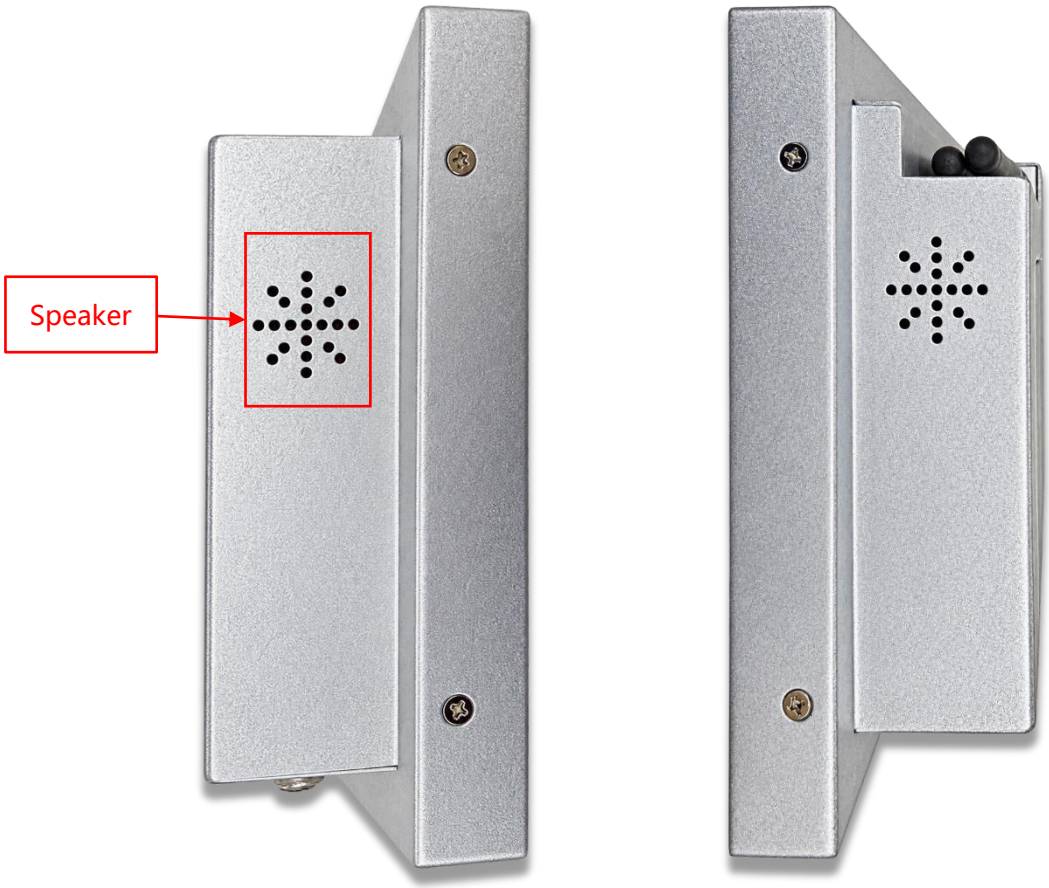

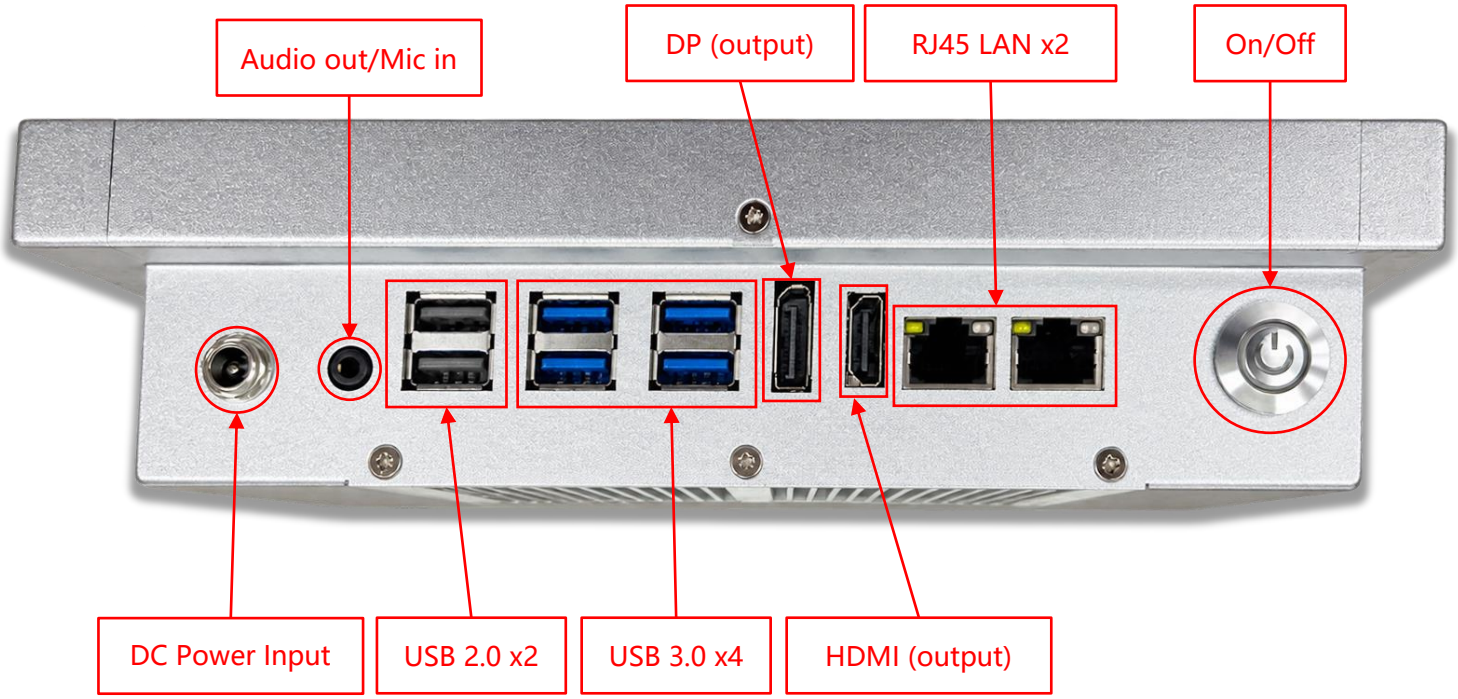

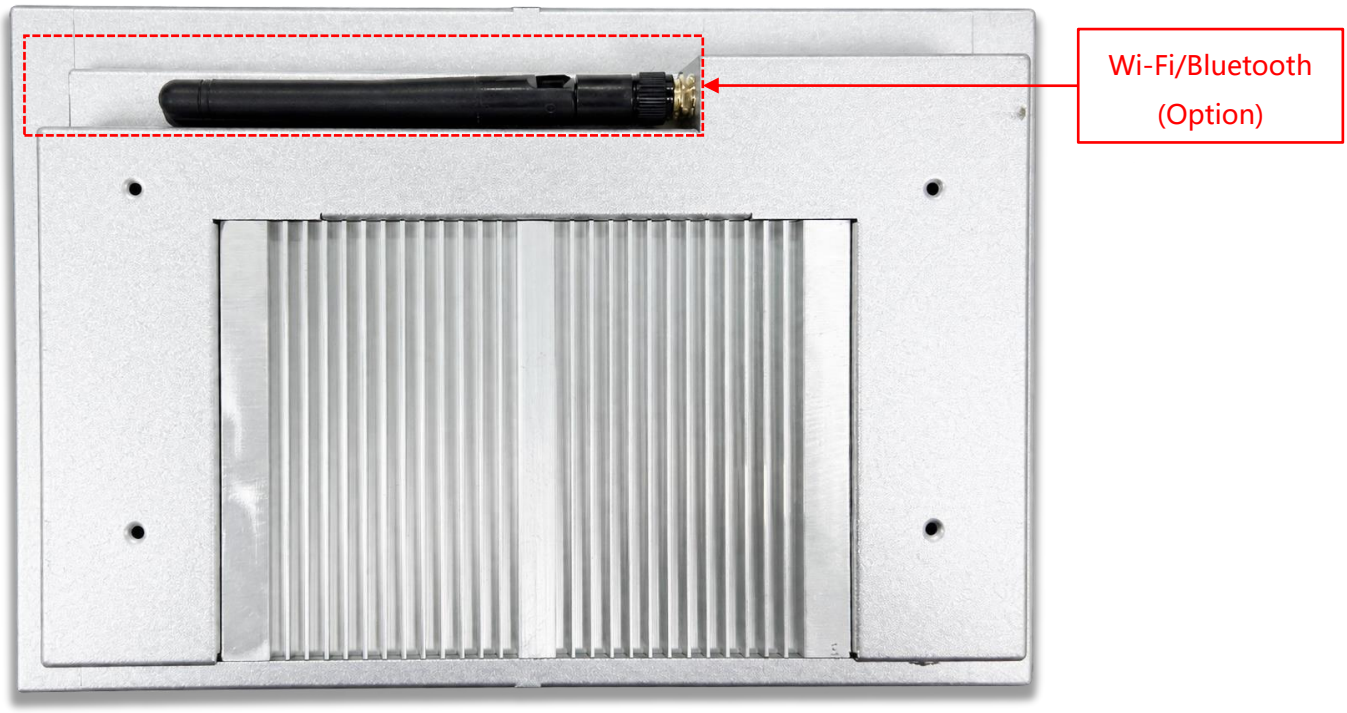

Input / Output	Connectors	Input / Output	Connectors
HDMI (Output)	**1**	Audio Output /Mic Input (3.5mm)	**1**
DP (Output)	**1**	Speakers	**1W x2**
USB 3.0	**4**	DC Power Input	**1**
USB 2.0	**2**	Wi-Fi/Bluetooth & Antenna	**Optional**
LAN (RJ45)	**2**		

Mounting Plate

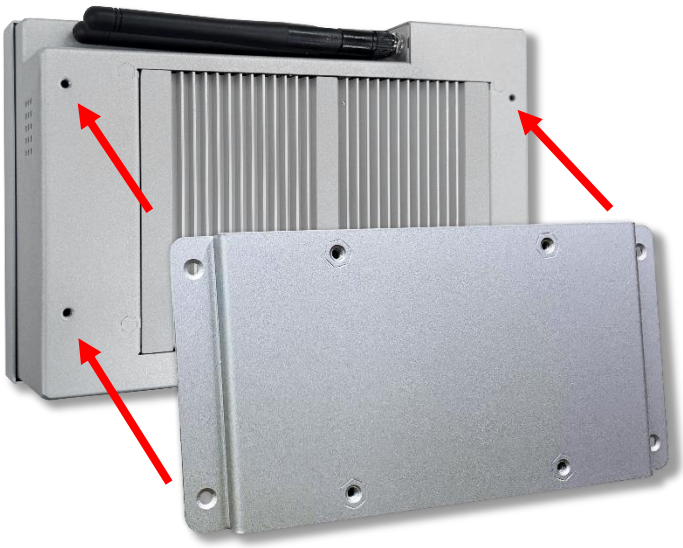

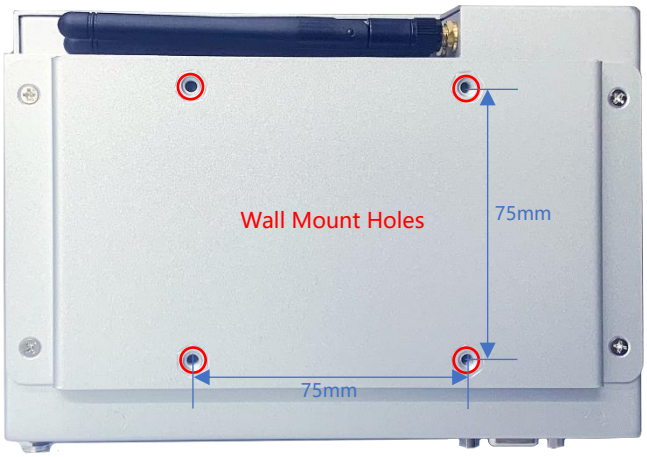

Physical Specifications

Dimensions (Max.)	**233.1x155x56(±2)mm**	Net Weight	**≦1.7 kg**
VESA Mount	**75x75 mm**	Gross Weight	**≦3.4 kg**

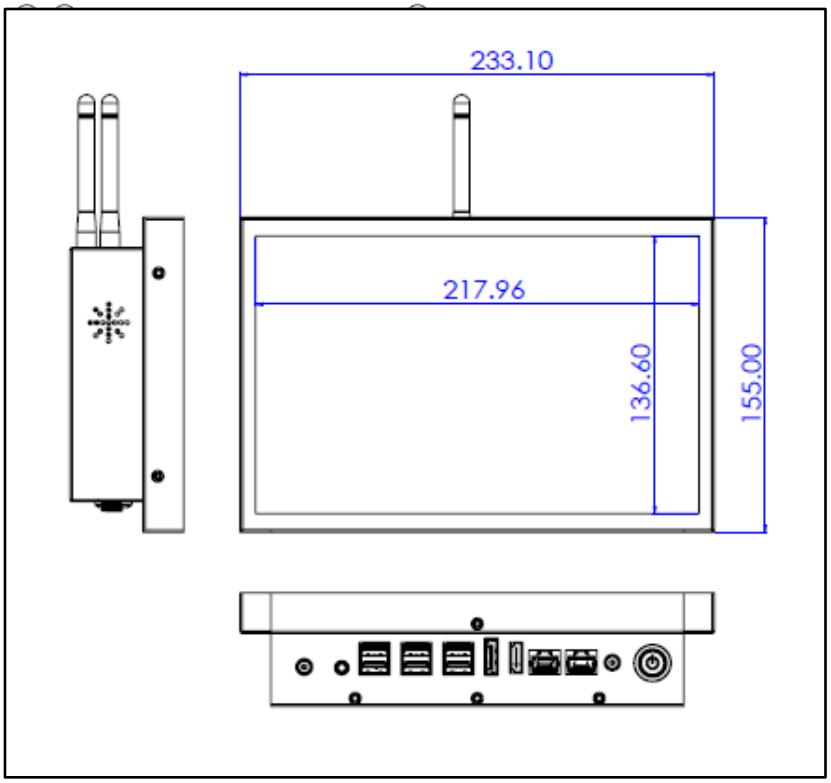

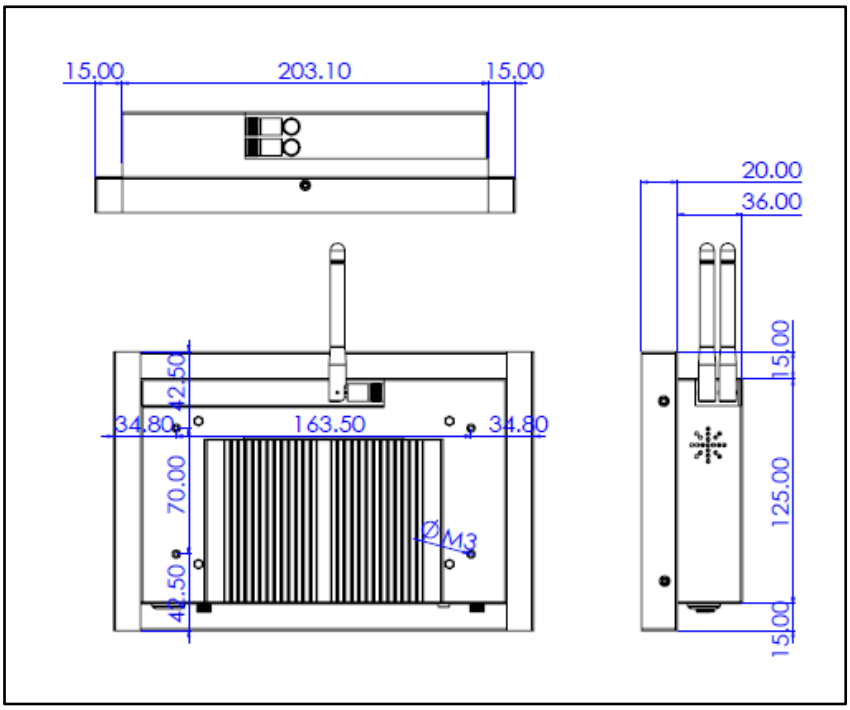

Cosmetic Inspection Criteria

Display Area Defect Criteria			
Defect Description	**Defect Criteria**	**Acceptance**	**Remarks**
Dot Defects (dark dot, particles, bubbles, pits, dust, and foreign matter)	D≦0.2mm	Ignored	D=Diameter
	0.2 < D≦0.7mm	N≦5	N=Quantity
	0.7 < D≦1mm	N≦3	
	D > 1mm	N≦0	
Linear Defect (scratches, fluff, particles)	W≦0.15mm	Ignored	W=Width
	0.15 < W≦0.5mm, L≦15mm	N≦2	L=Length
	W > 0.5mm or L > 15mm	NG	

* Visual inspection condition: 60 cm viewing distance, 90° viewing angle (front/side/back).

Front Appearance Defect Criteria (Including Coating)			
Defect Description	**Defect Criteria**	**Acceptance**	**Remarks**
Dot Defects (dark dot, particles, bubbles, pits, dust, and foreign matter)	D≦0.7mm	Ignored	D=Diameter
	0.7 < D≦1.5mm	N≦3	N=Quantity
	D > 1.5mm	N≦0	
Linear Defect (scratches, fluff, particles)	W≦0.2mm, L≦15mm	Ignored	W=Width, L=Length
	0.2 < W≦0.7mm, L≦15mm	N≦1	
	W > 0.7mm or L > 15mm	NG	

Side / Back Appearance Defect Criteria (Including Coating)			
Defect Description	**Defect Criteria**	**Acceptance**	**Remarks**
Dot Defects (dark dot, particles, bubbles, pits, dust, and foreign matter)	D≦1.5mm	Ignored	D=Diameter
	1.5 < D≦3mm	N≦8	N=Quantity
	D > 3mm	N≦2	
Linear Defect (including scratches, fluff, particles)	W≦0.8mm, L≦15mm	Ignored	W=Width, L=Length
	0.8 < W≦1.5mm, L≦15mm	N≦5	
	W > 1.5mm or L > 15mm	NG	

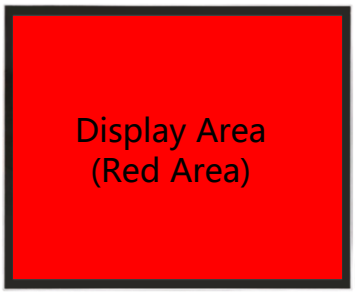

Front Appearance (Red Area)

Back Appearance