# Product Specifications

| | |
|---|---|
| **Customer** | |
| **Model Name** | **NTWP101-1 V613** |
| **Model Number** | **NTWP101XXXXXX-SIXXXXXX-XX02-613 *** |

* X = A-Z, 0-9 (Varies by options)

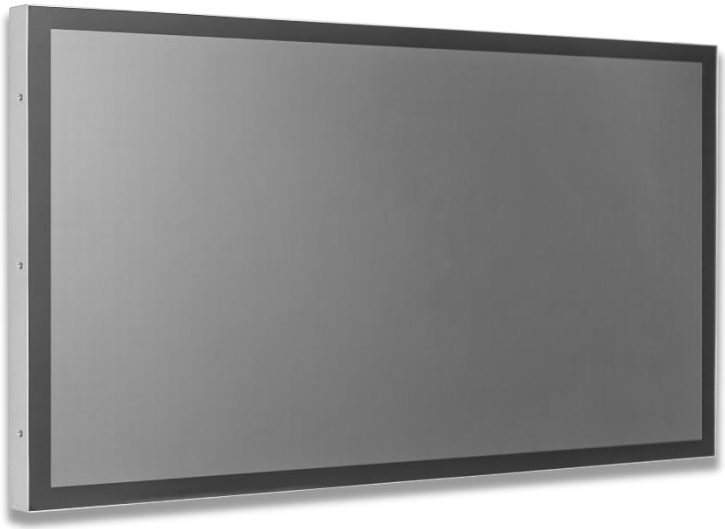

| Records of Revision | | | |
|---|---|---|---|
| **Vision** | **Modifying** | **Old Description** | **New Description** |
| **v2611.1** | **Initial release** | | |
| | | | |
| | | | |
| | | | |
| | | | |
| | | | |

## Key Features

PSE BSMI RoHS CE ISO9001 FCC

- ★ 10.1 inch Industrial LCD Panel, 1280x800 Resolution
- ★ Wide viewing angle 178°/178°
- ★ Wide-temperature LCD panel, operating temperature -20-60°C
- ★ Intel® 13th Generation Core i Series CPU
- ★ DDR4 8G RAM, Max to 32G
- ★ GbE LAN Port x2
- ★ 128G SSD, Max to 1T
- ★ USB 3.0 x6
- ★ Narrow-bezel true-flat PCAP touch screen
- ★ 7H Hardness tempered cover glass
- ★ 10-point multi-touch , supports Nextech stylus
- ★ Metal housing with multiple mounting options
- ★ Made in Taiwan, 3-year warranty, designed for harsh environments
- ★ Optional high brightness up to 1000nits for outdoor applications
- ★ Optional Privacy filter or antimicrobial surface treatment

Desktop Stand

Wall Mounting

Panel Mount

## System Specifications

| | |
|---|---|
| CPU | **Intel® Core i U Series Processor** |
| Memory | **DDR4 SO-DIMM, Max. Capacity 32G** |
| Network | **2 * Intel® GbE LAN Chip (10/100/1000 Mbps, RJ45)** |
| Storage | **SATA3.0 7P Connector (With 1 * SATA Power Wafer)x1**<br>**M.2 Key-M Slot (PCIe x4/ SATA, Default PCIE 4x, Support PCIe x4 NVMe, 2280) x1** |
| Sound Chip | **Realtek Audio HAD Codec** |
| Rear I/O | **HDMI x1, DP x1**<br>**RJ45 LAN Ports x2**<br>**USB 3.0 x6**<br>**Line-Out + MIC 2in1 3.5mm Jack x1** |
| Power Input | **12VDC-in** |

## Display Specifications

| | | | |
|---|---|---|---|
| Screen Diagonal | **10.1 inch** | Response Time | **29 msec.** |
| Active Area | **216.96x135.6 mm** | Display Mode | **Normally Black** |
| Resolution | **1280x800** | Backlight Unit | **White LED** |
| Contrast Ratio | **800:1** | Viewing Angle (L/R, U/D) | **178°/178° (CR≥10)** |
| Display Ratio | **16:10** | Backlight Lifetime | **>30,000 Hours** |
| Colors | **16.7M Colors** | Operating Temp. | **-20~60℃** |
| Pixel Pitch | **0.1695x0.1695 mm** | Storage Temp. | **-20~60℃** |

## Brightness Options

| Configuration | Brightness | Application | Ordering Information |
|---|---|---|---|
| **Standard** | **500nits** | **General (Indoor)** | **NTWP101NXSXX-SIXXXXX-XX02-613** |
| Optional | 1000nits | Outdoor / Semi-outdoor | NTWP101HX2XX-SIXXXXX-XX02-613 * |

* Refer to datasheets: NTWP101-2

## Touch Options

| Configuration | Specification | Ordering Information |
|---|---|---|
| **Standard** | **Projected Capacitive Touch** | **NTWP101XPXXX-SIXXXXX-XX02-613** |
| Optional | No touch | NTWP101X0XXX-SIXXXXX-XX02-613 |

PCAP Touch Specifications

| | | | |
|---|---|---|---|
| Allowed Touch Points | 10 points | Thickness of Cover Lens | 1.1±0.2mm |
| Transparency | ≧87% | Hardness of Cover Lens | 7H |
| Accuracy | 99.00% | IK Ratings | IK07 |

## Surface Treatment Options

| Surface Treatment Options | | |
|---|---|---|
| **Configuration** | **Specification** | **Ordering Information** |
| **Standard** | **Glare Type** | **NTWP101XXX00-SIXXXXX-XX02-613** |
| Optional | Anti-Glare & UV-resistant Coating | NTWP101XXXGG-SIXXXXX-XX02-613 |
| Optional | Antibacterial (AB Film) | NTWP101XXXAB-SIXXXXX-XX02-613 |
| Optional | Privacy filter (AS Film) | NTWP101XXXSF-SIXXXXX-XX02-613 |

## System Options

| CPU | | |
|---|---|---|
| **Configuration** | **Specification** | **Ordering Information** |
| **Standard** | **Core i3-1315U** | **NTWP101XXXXX-SI31XXX-XX02-613** |
| Optional | Core i5-1335U | NTWP101XXXXX-SI51XXX-XX02-613 |
| Optional | Core i7-1355U | NTWP101XXXXX-SI71XXX-XX02-613 |

| Memory | | |
|---|---|---|
| **Configuration** | **Specification** | **Ordering Information** |
| **Standard** | **DDR4 SO-DIMM 8G** | **NTWP101XXXXX-SIXX8XX-XX02-613** |
| Optional | DDR4 SO-DIMM 16G | NTWP101XXXXX-SIXXAXXX-XX02-613 |
| Optional | DDR4 SO-DIMM 32G | NTWP101XXXXX-SIXXBXXX-XX02-613 |

| Storage | | |
|---|---|---|
| **Configuration** | **Specification** | **Ordering Information** |
| **Standard** | **SSD 128G** | **NTWP101XXXXX-SIXXXS1-XX02-613** |
| Option 1 | SSD 256G | NTWP101XXXXX-SIXXXS2-XX02-613 |
| Option 2 | SSD 512G | NTWP101XXXXX-SIXXXS3-XX02-613 |
| Option 3 | SSD 1TB | NTWP101XXXXX-SIXXXS4-XX02-613 |

## Housing Options

| Housing Material | | |
|---|---|---|
| **Configuration** | **Specification** | **Ordering Information** |
| **Standard** | **SECC** | **NTWP101XXXXX-SIXXXXX-SX02-613** |
| Optional | Stainless Steel | NTWP101XXXXX-SIXXXXX-LX02-613 |
| Optional | Aluminum | NTWP101XXXXX-SIXXXXX-AX02-613 |

| Housing Color | | |
|---|---|---|
| **Configuration** | **Specification** | **Ordering Information** |
| **Standard** | **Silver** | **NTWP101XXXXX-SIXXXXX-XS02-613** |
| Optional | White | NTWP101XXXXX-SIXXXXX-XW02-613 |
| Optional | Black | NTWP101XXXXX-SIXXXXX-XB02-613 |
| Optional | Custom Color | NTWP101XXXXX-SIXXXXX-XX02-613 * |

* X = A~Z, 0~9 (Varies by Color)

## Nextech Stylus Option

| | |
|---|---|
| Tip | Passive conductive metal mesh |
| Tip Diameter | 6mm |
| Magnetic Attachment | Yes |

## Optional Mounting Accessories

| | Accessories | Description |
|---|---|---|
| Optional | Desktop stand | For desktop use |
| Optional | Panel mount kit | For front mounting into kiosks, cabinets, or equipment panels. |
| Optional | Open-frame brackets | For rear mounting installation inside kiosks, cabinets, or equipment panels. |
| Optional | Wall Mount Bracket | For wall mounting |

### Desktop Stand Type L (Optional)

| Item | L Stand | Model | DST-0B004/DST-1B004 |
|---|---|---|---|
| VESA Mount | 100x100 / 75x75 mm | Dimensions | 194x194x222 mm |
| Material | SECC | Net Weight | 1.4 kg |
| Tilt Angle | 105° | Load Capacity | 15 kg |

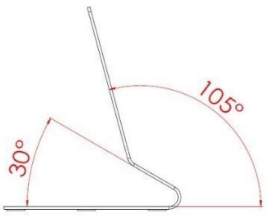

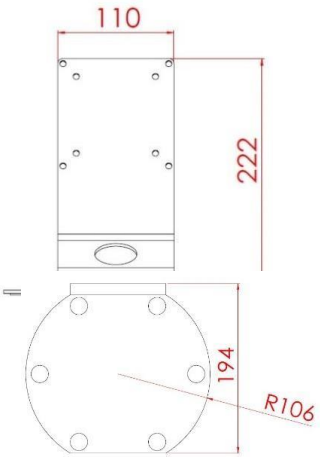


### Desktop Stand Type B (Optional)

| Item | B Stand | Model | DST-0B002/DST-1B002 |
|---|---|---|---|
| VESA Mount | 100x100 / 75x75 mm | Dimensions | 203x275x227 mm |
| Material | Steel/Plastic/Aluminum | Net Weight | 1.8 kg |
| Tilt Angle | -2° ~+180° | Load Capacity | 15 kg |

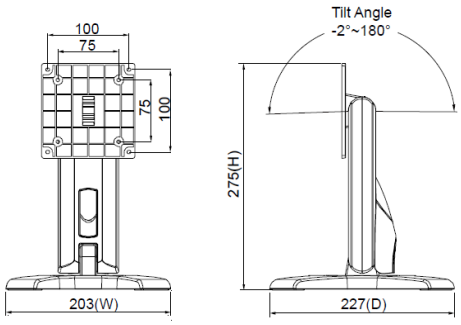

## Panel Mount Kits (Option)

## Panel Mount Installation Dimensions

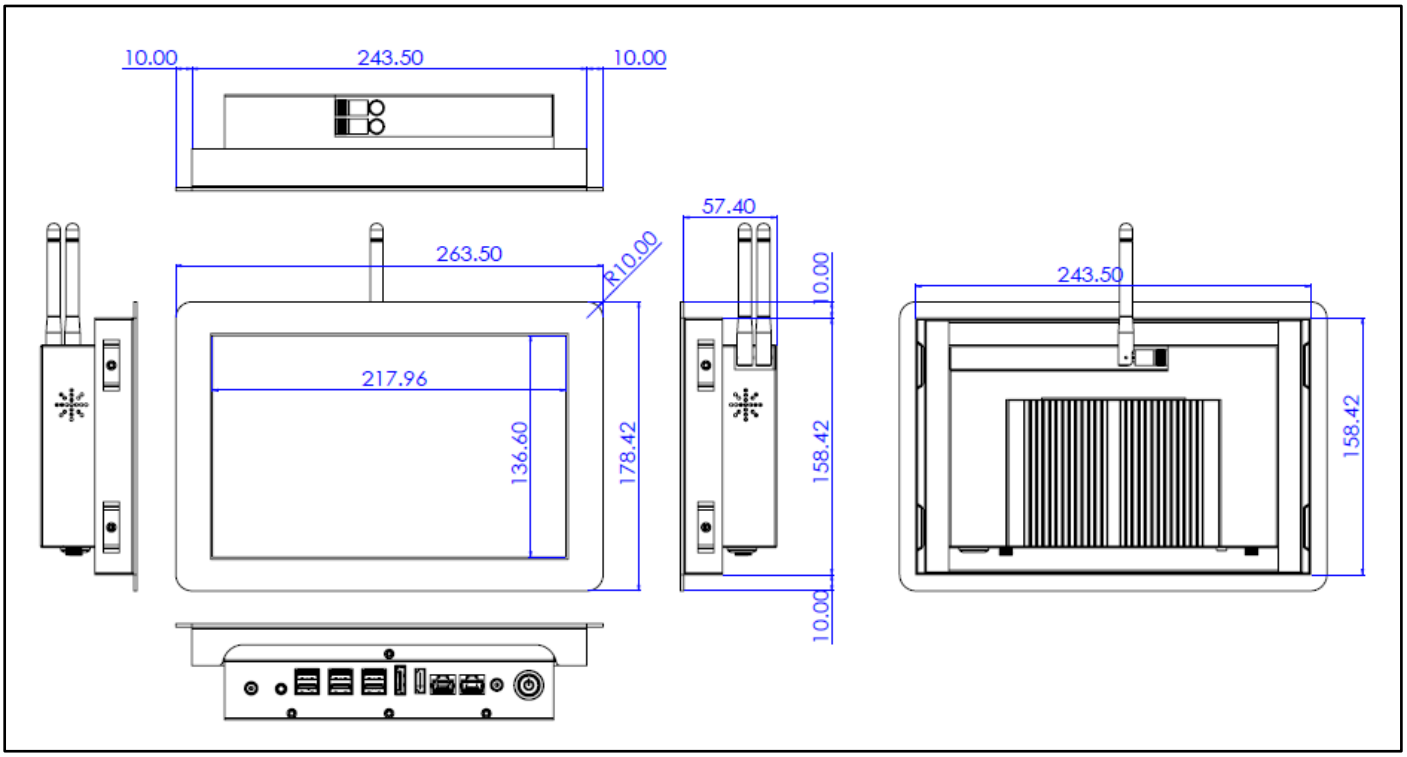

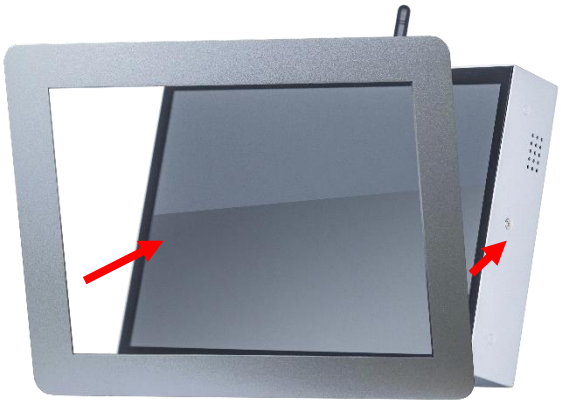

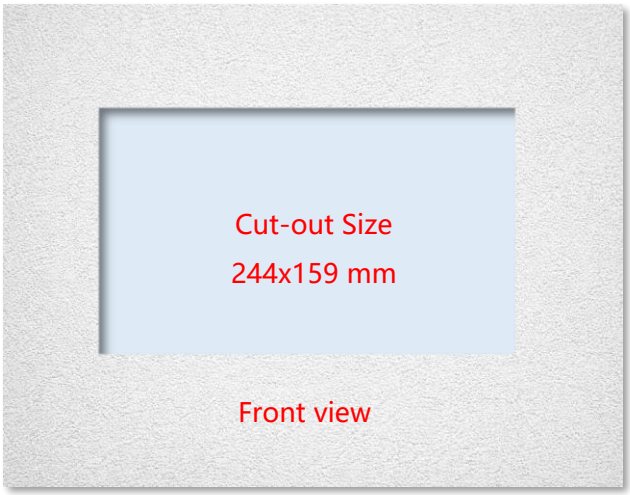


Step 1

Assemble the front module with the display unit.

(This step is pre-assembled at Nextech's factory.)

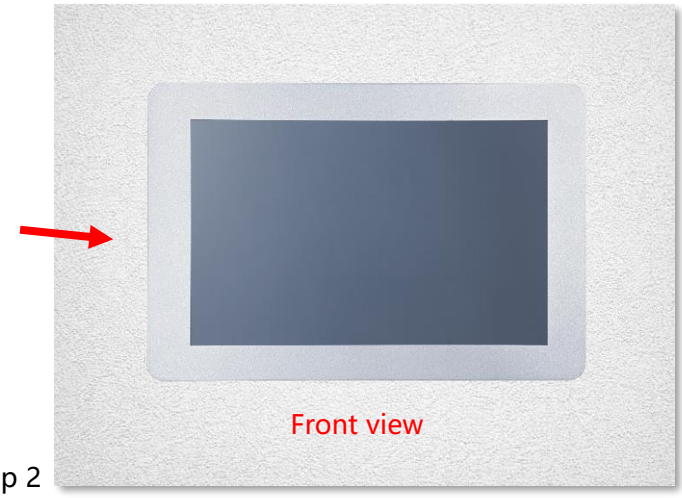


Step 2

Insert the display into the cut-out from the front.

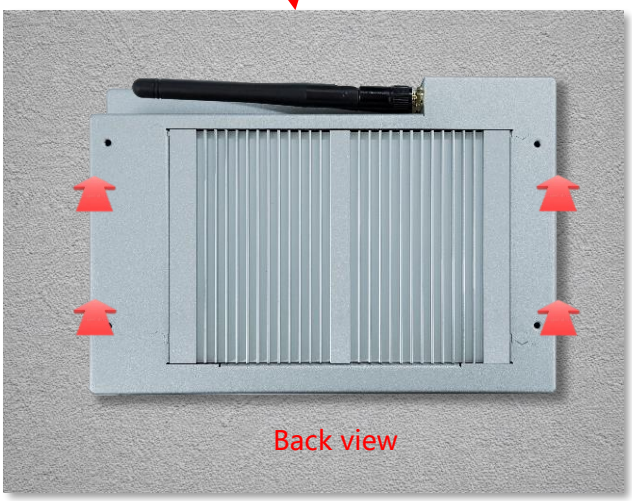


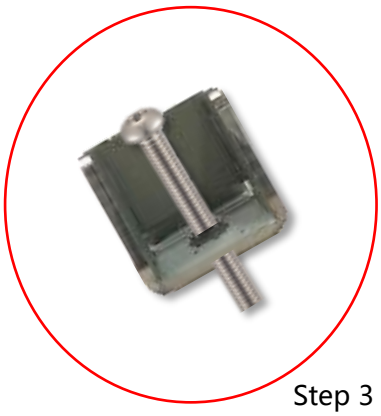

Step 3

Install the mounting clips from the rear side and secure them with screws.

Wall Mount Bracket (Optional)

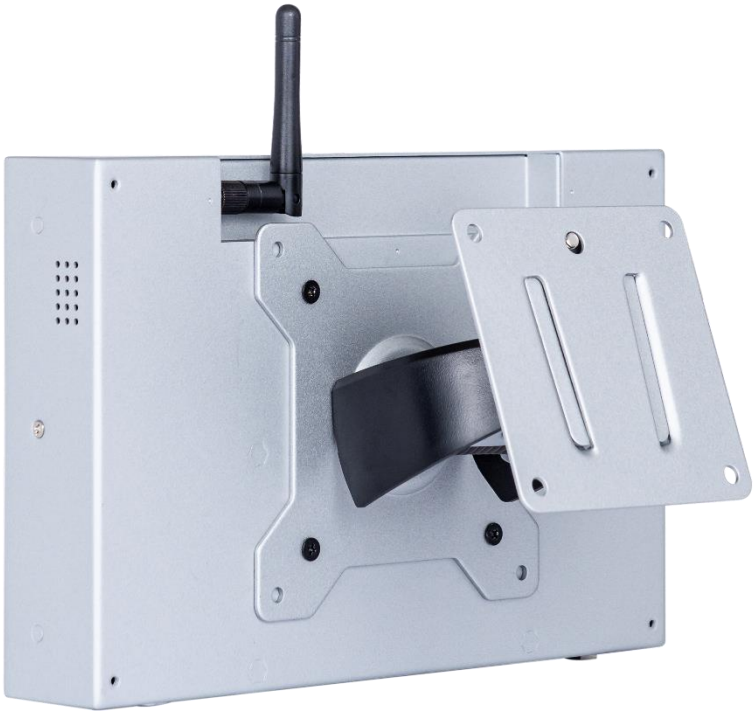

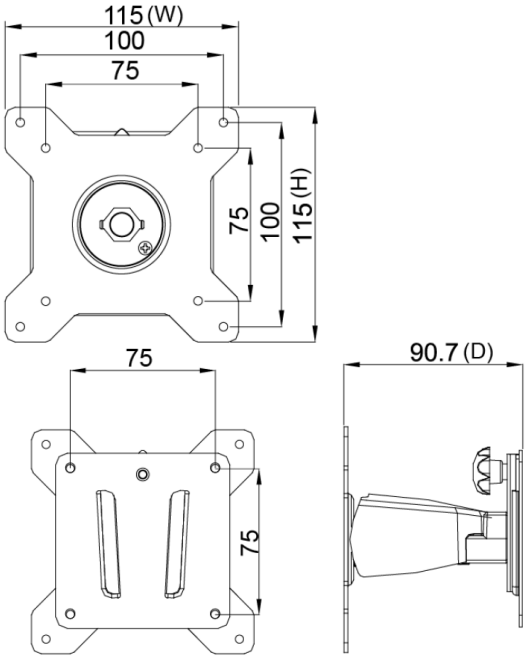


## Packing Information

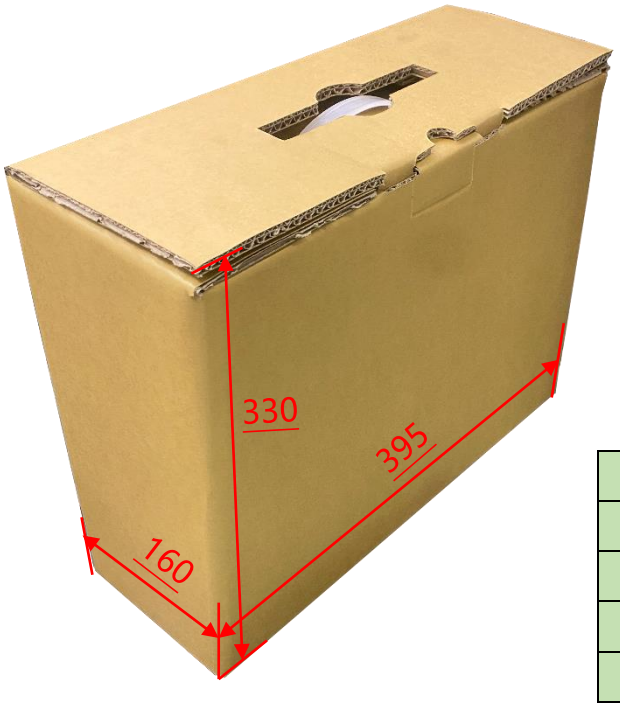


| | |
|---|---|
| Carton Dimensions | **395x160x330 mm** |
| Net Weight | **≦1.7 kg** |
| Gross Weight | **≦3.4 kg** |
| Units per Pallet | **72 units** |
| Pallet Size | **120x100x142 cm** |

## Input /Output System

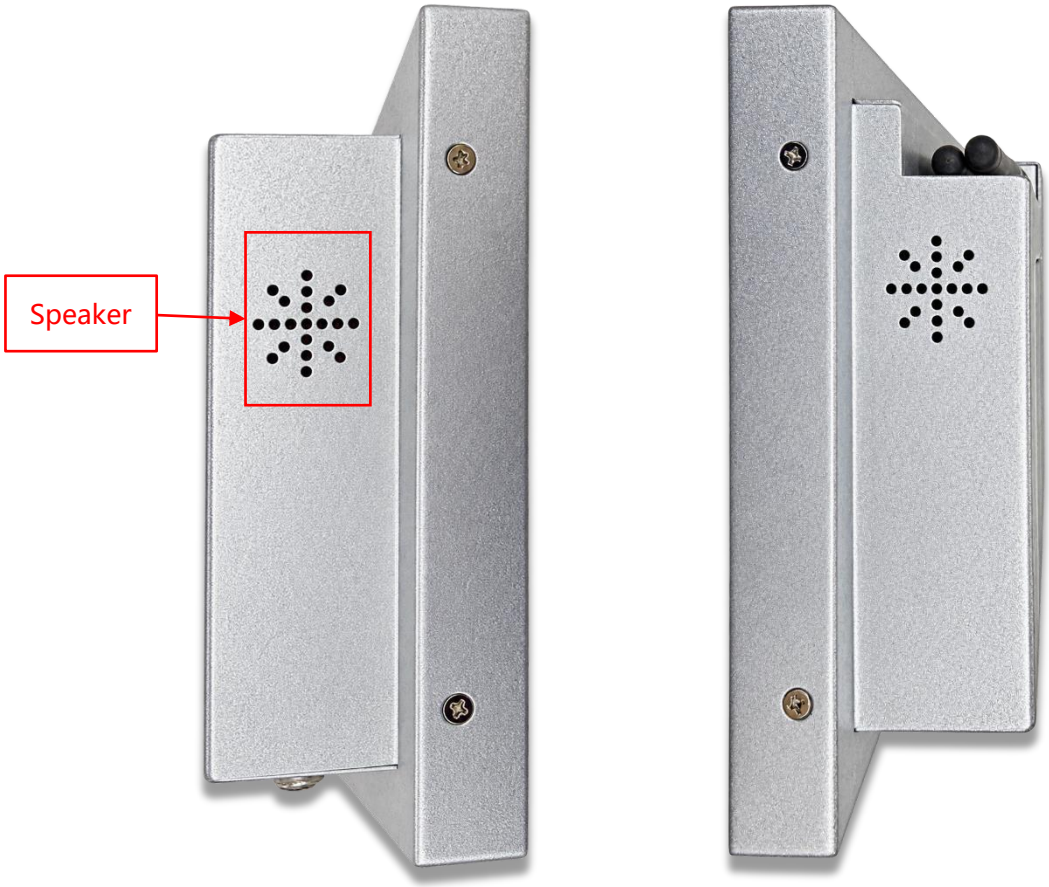


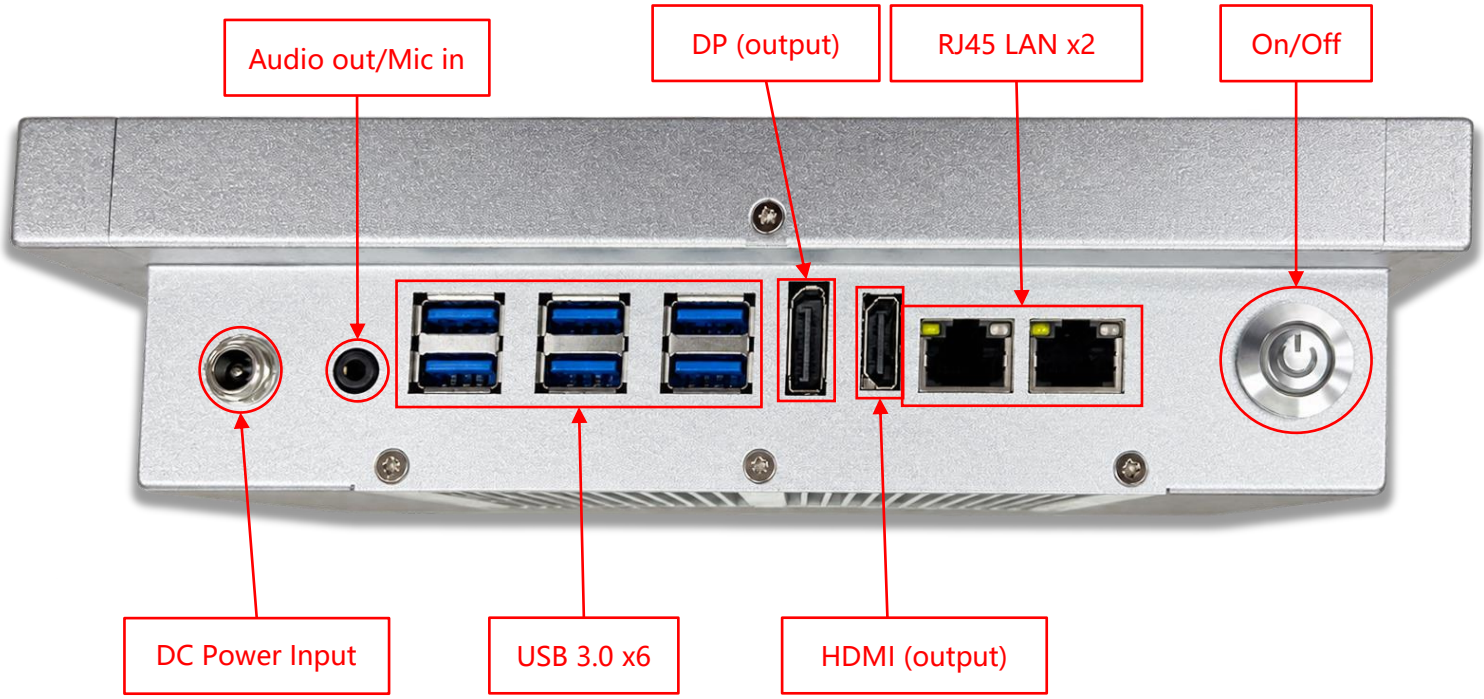

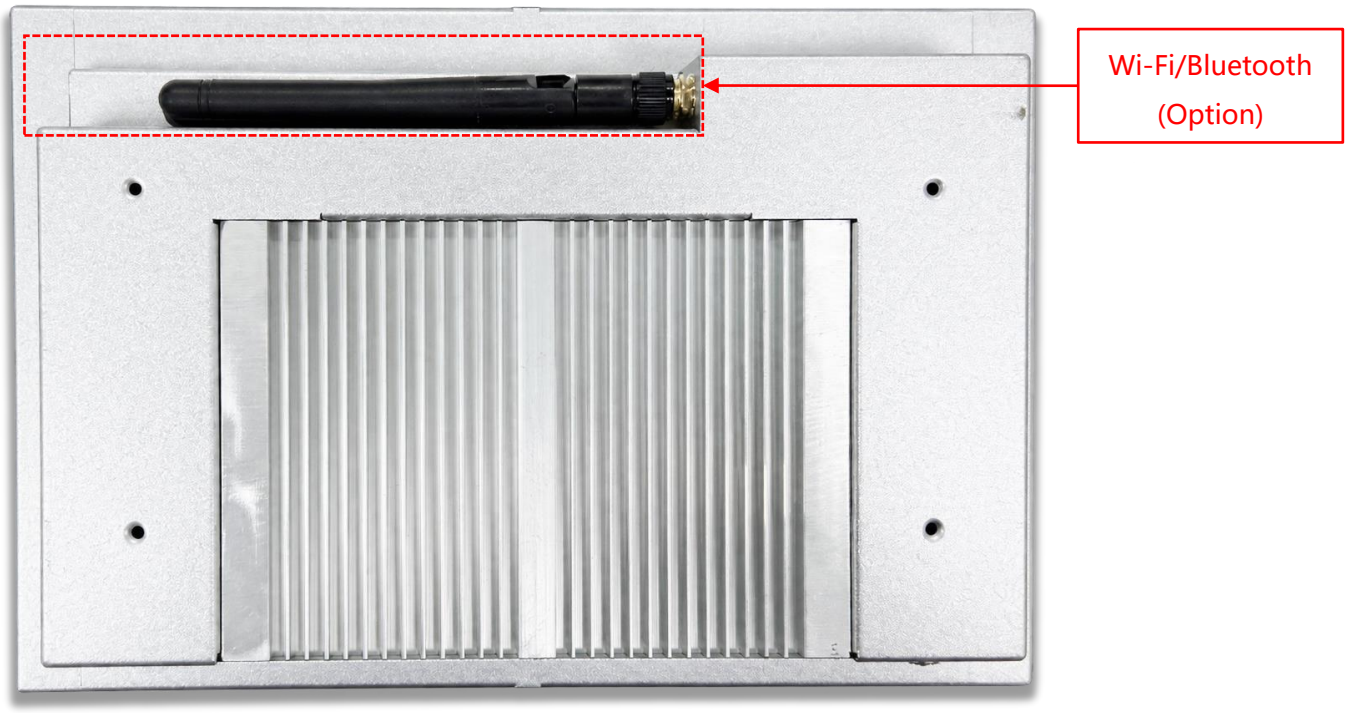


| Input / Output | Connectors | Input / Output | Connectors |
|---|---|---|---|
| HDMI (Output) | **1** | Audio Output /Mic Input (3.5mm) | **1** |
| DP (Output) | **1** | Speakers | **1W x2** |
| USB 3.0 | **6** | DC Power Input | **1** |
| LAN (RJ45) | **2** | Wi-Fi/Bluetooth & Antenna | **Optional** |

Mounting Plate

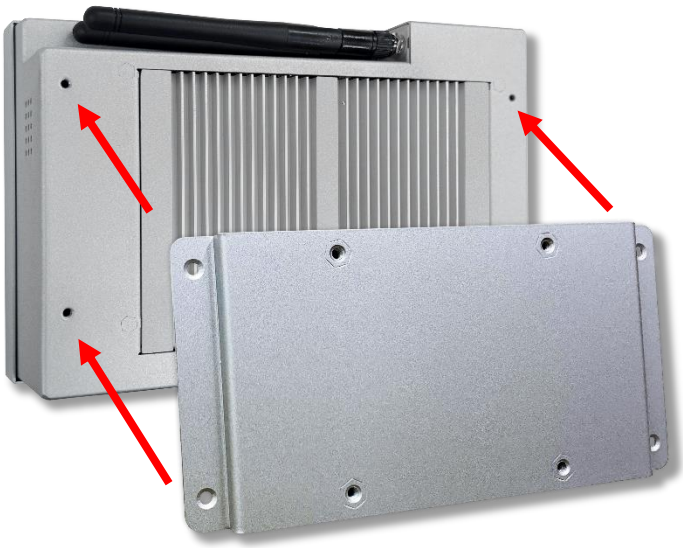

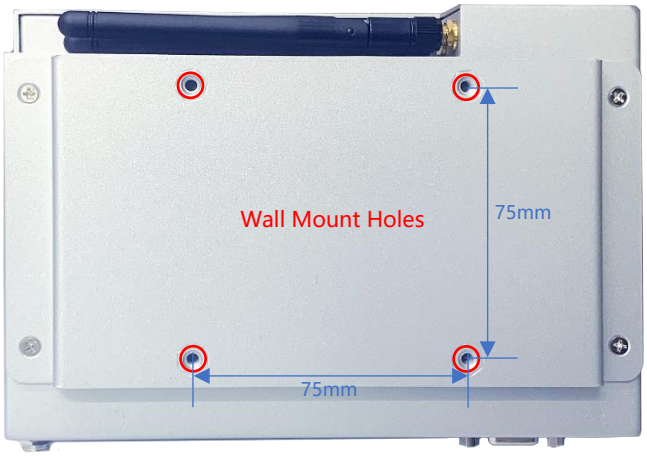

## Physical Specifications

| | | | |
|---|---|---|---|
| Dimensions (Max.) | **233.1x155x56(±2)mm** | Net Weight | **≦1.7 kg** |
| VESA Mount | **75x75 mm** | Gross Weight | **≦3.4 kg** |

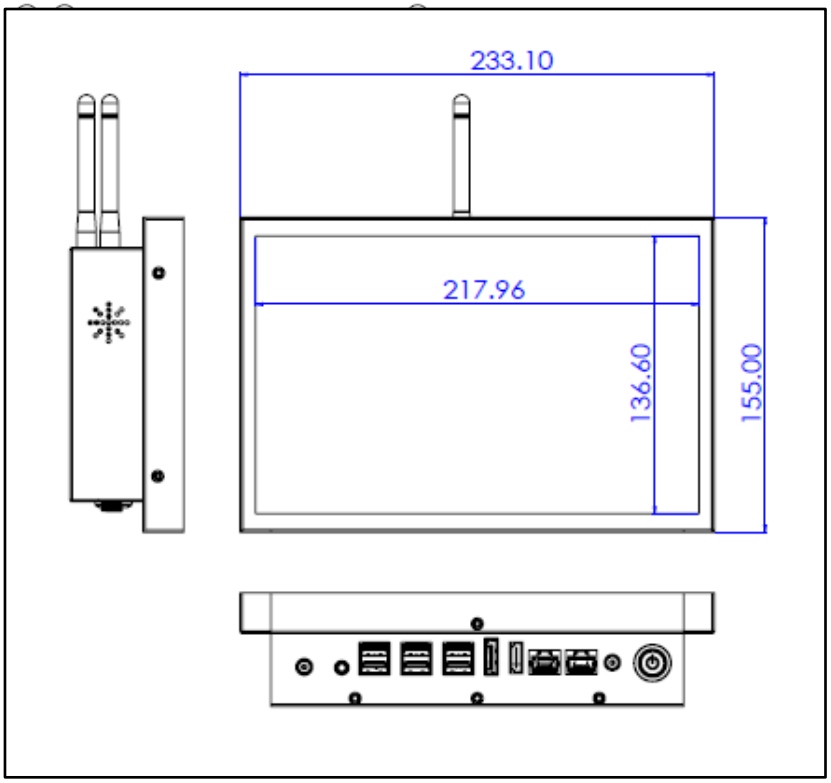


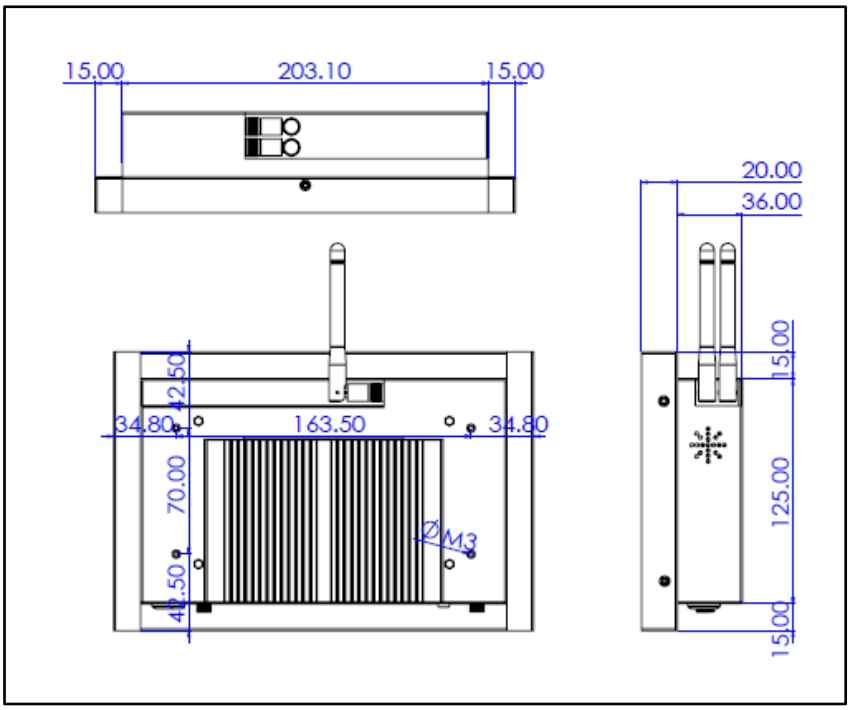

# Cosmetic Inspection Criteria

| Display Area Defect Criteria | | | |
|---|---|---|---|
| **Defect Description** | **Defect Criteria** | **Acceptance** | **Remarks** |
| Dot Defects (dark dot, particles, bubbles, pits, dust, and foreign matter) | D≦0.2mm | Ignored | D=Diameter |
| | 0.2 < D≦0.7mm | N≦5 | N=Quantity |
| | 0.7 < D≦1mm | N≦3 | |
| | D > 1mm | N≦0 | |
| Linear Defect (scratches, fluff, particles) | W≦0.15mm | Ignored | W=Width |
| | 0.15 < W≦0.5mm, L≦15mm | N≦2 | L=Length |
| | W > 0.5mm or L > 15mm | NG | |

* Visual inspection condition: 60 cm viewing distance, 90° viewing angle (front/side/back).

| Front Appearance Defect Criteria (Including Coating) | | | |
|---|---|---|---|
| **Defect Description** | **Defect Criteria** | **Acceptance** | **Remarks** |
| Dot Defects (dark dot, particles, bubbles, pits, dust, and foreign matter) | D≦0.7mm | Ignored | D=Diameter |
| | 0.7 < D≦1.5mm | N≦3 | N=Quantity |
| | D > 1.5mm | N≦0 | |
| Linear Defect (scratches, fluff, particles) | W≦0.2mm, L≦15mm | Ignored | W=Width, L=Length |
| | 0.2 < W≦0.7mm, L≦15mm | N≦1 | |
| | W > 0.7mm or L > 15mm | NG | |

| Side / Back Appearance Defect Criteria (Including Coating) | | | |
|---|---|---|---|
| **Defect Description** | **Defect Criteria** | **Acceptance** | **Remarks** |
| Dot Defects (dark dot, particles, bubbles, pits, dust, and foreign matter) | D≦1.5mm | Ignored | D=Diameter |
| | 1.5 < D≦3mm | N≦8 | N=Quantity |
| | D > 3mm | N≦2 | |
| Linear Defect (including scratches, fluff, particles) | W≦0.8mm, L≦15mm | Ignored | W=Width, L=Length |
| | 0.8 < W≦1.5mm, L≦15mm | N≦5 | |
| | W > 1.5mm or L > 15mm | NG | |

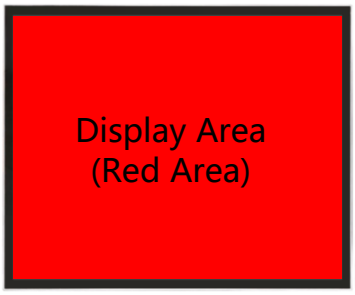

Front Appearance (Red Area)

Back Appearance