Product Specifications

Customer	
Model	**NTAP215-1-S5 V600**
Model No.	**NTAP215XXSXX-S5A54FB-XXXX-600**

* X = A~Z, 0~9 (Depends on Options.)

Records of Revision			
Vision	**Modifying**	**Old Description**	**New Description**
v2506.1	Preliminary specification		
v2506.2	**Revised I/O Design**	**USB 3.0 x1, USB 2.0 x4**	**USB 3.0 x1, USB 2.0 x1**

Features

PSE BSMI RoHS CE ISO9001 FCC

- ★ 21.5 inch Panel, 1920x1080 (FHD) Resolution
- ★ Wide Viewing Angle Technology (178°/178°)
- ★ Rock Chip ARM Cortex A55 RK3568 Quad-Core 2.0GHz CPU
- ★ On Board DDR4 4G Memory
- ★ On Board 32 Flash ROM
- ★ Micro SD Card Slot x1
- ★ Android 11
- ★ Narrow Bezel, True Flat Projected Capacitive Touch Screen
- ★ 7H Hardness Tempered Cover Glass
- ★ 10 points Multi-touch, Supports NEXTECH Dedicated Stylus
- ★ Metal Cabinet with Diverse Combine Options
- ★ Made in Taiwan, 3 Years Warranty
- ★ Optional High Brightness 1500nits, for Outdoor Environment
- ★ Optional AG Coating/Anti-UV/Antibacterial/Privacy Filter Surface Treatment

Desktop Stand

Wall Mounting

Open-frame Brackets

Panel Mount

System Specifications

CPU	**Rock Chip ARM Cortex A55 RK3568 Quad-Core 2.0GHz**
Memory	**DDR4 4G**
Storage	**32G Flash ROM**
Sound Chip	**Realtek Audio HDA Codec**
Physical Network	**Realtek GbE LAN Chip (RJ45, 10/100/1000 Mbps)**
Wireless Network	**Wi Fi 2.4/5GHz and Bluetooth 4.2 (support BLE)**
OS	**Android 11**

Display Specifications

Screen Diagonal	**21.5 inch**	Display Mode	**Normally Black**
Display Area	**476.064x267.786 mm**	Backlight Unit	**LED (white LED)**
Resolution	**1920x1080 (FHD)**	Viewing Angle (L/R, U/D)	**178°/178° (CR=10)**
Contrast Ratio	**1000:1**	Response Time	**14 msec.**
Display Ratio	**16:9**	Backlight Lifetime	**>30,000 Hours**
Support Colors	**16.7M Colors**	Operating Temp.	**0~50℃**
Pixel Pitch	**0.24795x0.24795 mm**	Storage Temp.	**-20~60℃**

Display Options

Brightness			
	Brightness	**Environment**	**Model Name**
Standard	**500nits**	**General**	**NTAP215NXSXX-S5A54FB-XXXX-600**
Option 1	1000nits	Outdoor Environment	NTAP215AXSXX-S5A54FB-XXFX-600
Option 2	1500nits	Sunlight Readable	NTAP215HX2XX-S5A54FB-XXFX-600 *

* Check the data sheet NTAP215-2-S5 V600

Touch Options

Touch Screen		
	Description	**Model Name**
Standard	**Projected Capacitive Touch**	**NTAP215NXSXX-S5A54FB-XXXX-600**
Option 1	Resistive Touch	NTAP215AXSXX-S5A54FB-XXFX-600
Option 2	Non-Touch	NTAP215HX2XX-S5A54FB-XXFX-600 *

Projected Capacitive Touch

Touch Technology	Projected Capacitive	Thickness of Cover Lens	2.0±0.2mm
Allowed Touch Points	10 points	Hardness of Cover Lens	7H
Transparency	≧87%	IK Ratings	IK07
Accuracy	99.00%		

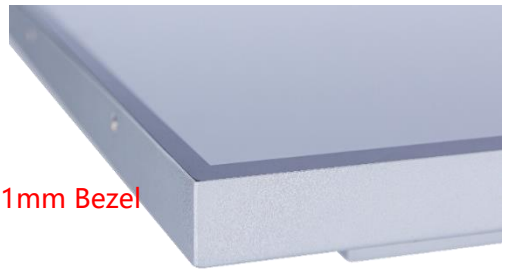

* True Flat, 1mm Bezel

Resistive Touch

Touch Technology	Resistive Touch	Transparency	80%±5%
Allowed Touch Points	1 point	Surface Treatment	Anti-glare<15%
Precision	98.50%	Hardness	≧3H

Surface Treatment		
	Description	**Model Name**
Standard	**(none)**	**NTAP215XXS00-S5A54FB-XXXX-600**
Option 1	Anti-Glare&Anti-UV Coating	NTAP215XXSGG-S5A54FB-XXXX-600
Option 2	Antibacterial (AB Film)	NTAP215XXSAB-S5A54FB-XXXX-600
Option 3	Anti-Spy (AS Film)	NTAP215XXSSF-S5A54FB-XXXX-600

System Options

Material of Cabinet		
	Description	Model Name
Standard	**SECC**	**NTAP215XXSXX-S5A54FB-SXXX-600**
Option 1	Stainless Steel	NTAP215XXSXX-S5A54FB-LXXX-600
Option 2	Aluminum	NTAP215XXSXX-S5A54FB-AXXX-600

Color of Cabinet		
	Description	Model Name
Standard	**Silver**	**NTAP215XXSXX-S5A54FB-XSXX-600**
Option 1	White	NTAP215XXSXX-S5A54FB-XWXX-600
Option 2	Black	NTAP215XXSXX-S5A54FB-XBXX-600
Options	Other Colors	NTAP215XXSXX-S5A54FB-XXXX-600

* X = A~Z, 0~9 (Depends on Color)

Cooling Fan		
	Description	Model Name
Standard	**Fanless**	**NTAP215XXSXX-S5A54FB-XX0X-600**
Option	7 Blades/4000r.p.m/28.3dB	NTAP215XXSXX-S5A54FB-XXFX-600

Power Input		
	Description	Model Name
Standard	**12VDC-in, with AC/DC Adapter**	**NTAP215XXSXX-S5A54FB-XXX2-600**
Option	100~240V AC, C14 AC Power Socket	NTAP215XXSXX-S5A54FB-XXXA-600

DC-in

AC-in

Input /Output System

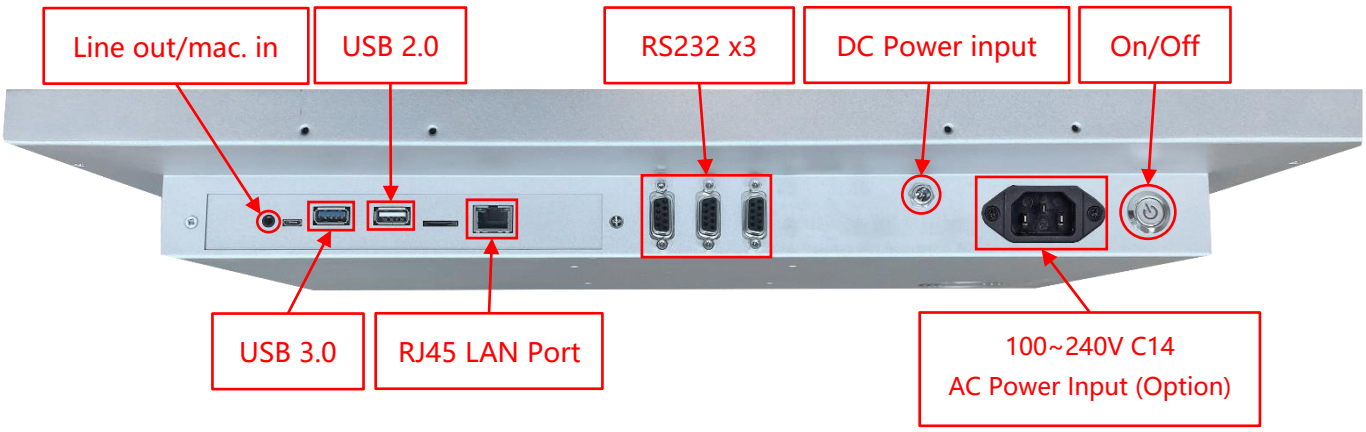

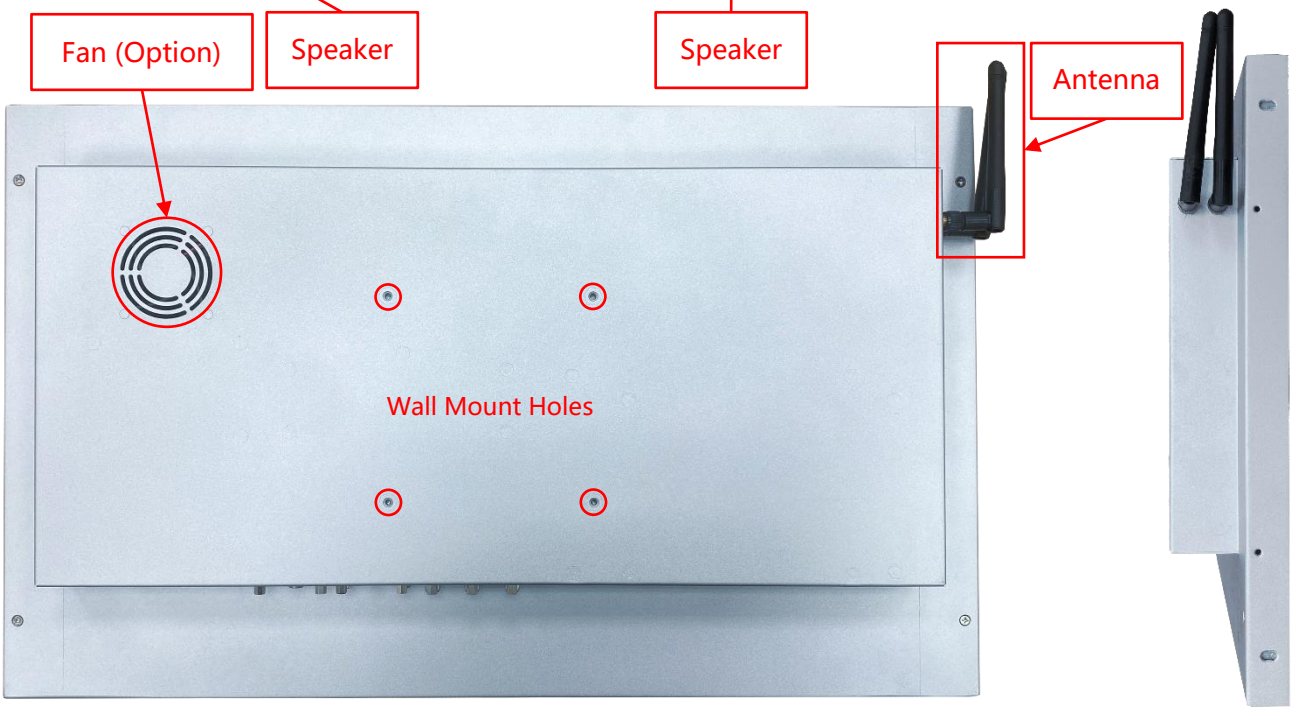

Input / Output	Connectors	Input / Output	Connectors
DC Power Input	**1**	Line out/Mic. In (3.5mm)	**1**
AC Power Input	**Option**	LAN (RJ45)	**1**
USB 2.0	**1**	Wi-Fi/Bluetooth & Antenna	**1**
USB 3.0	**1**	Speakers	**2W x2**
RS232	**3**		

Camera & Microphone (Option)

Lens	1/3.06" CMOS Image sensor
Max. Resolution	12MP 3840x3104
Default Resolution	3840x2160 (UHD/4K)
Pixel Size	1.12um x1.12um
Device Name	12Mp WebCam
Auto Focus	Yes
Focus Distance	10 CM~Infinity
Input Voltage	5V
Microphone Sensitivity	-26 dBFS
Frequency	2.4 MHz
Data Latency	18~60 nsec

Stylus (Option)

Technology	Passive High Sensitive Knitted Wire Mesh Fiber Tip
Size of tip	6mm
Magnetic Attachment	Yes

Magnetic Attachment

Front Cover (Option)

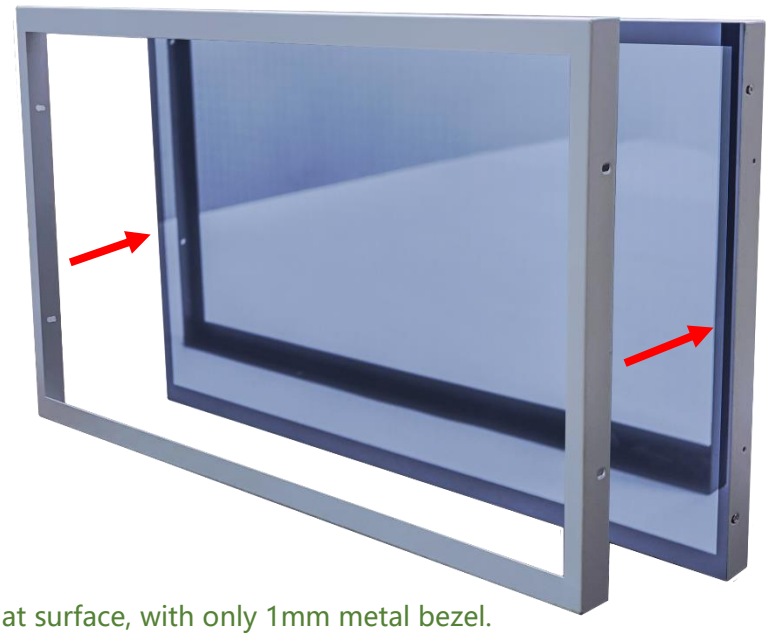

The standard **NTAP215** is true flat surface, with only 1mm metal bezel.
To protect the corners of the touch screen, the **Front Cover** can be added.

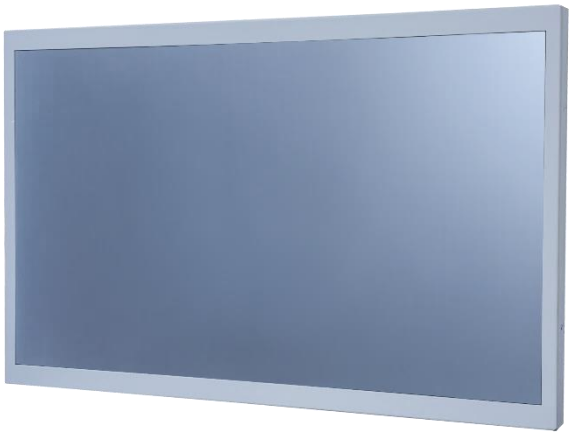

The watertight gasket can be added between the **Front Cover** and **NTAP270.**
It complies **IP65** on front.

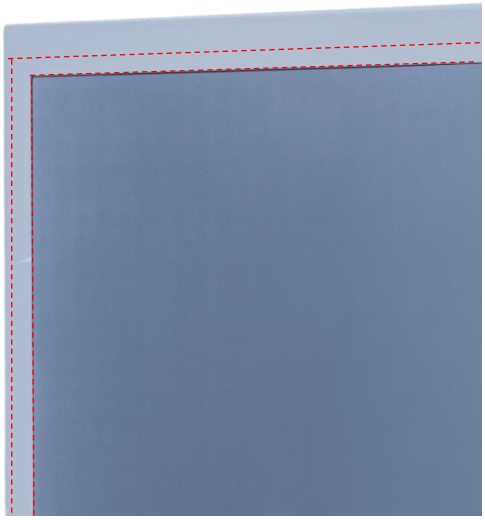

Open-frame Brackets (Option)

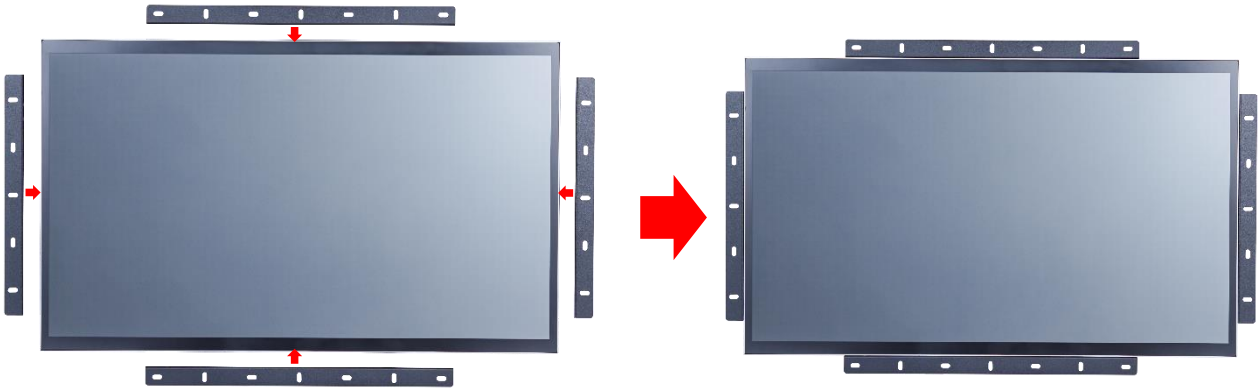

Dimension for Installing with Open-frame Brackets

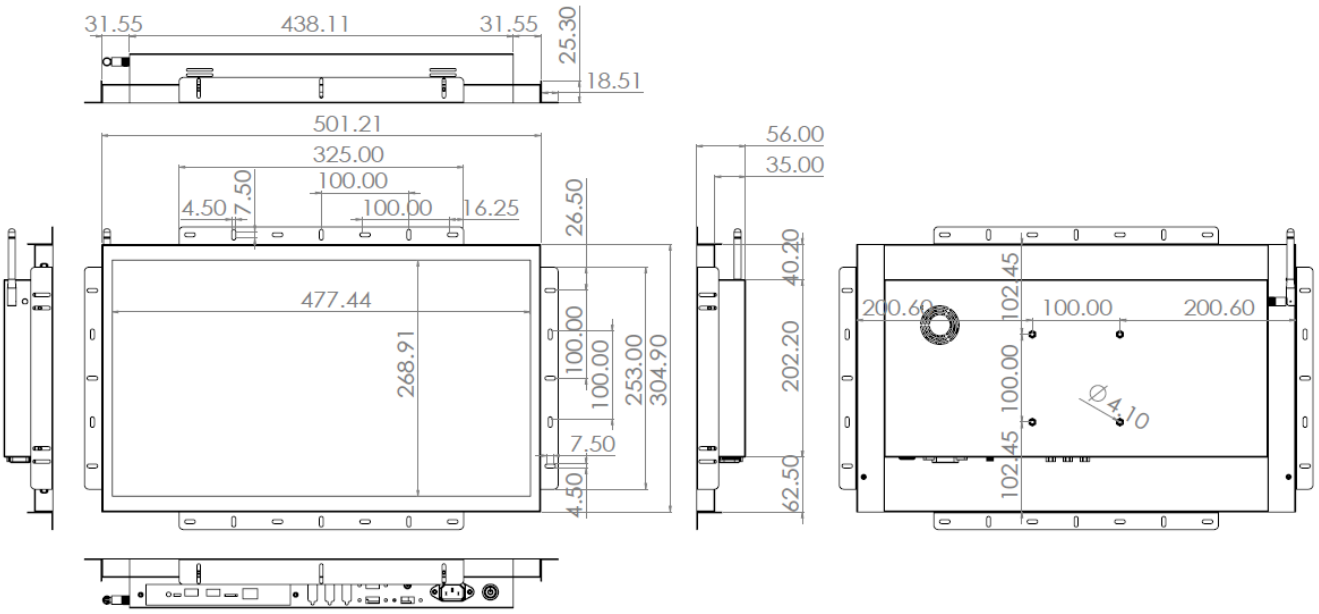

Panel Mount Kits (Option)

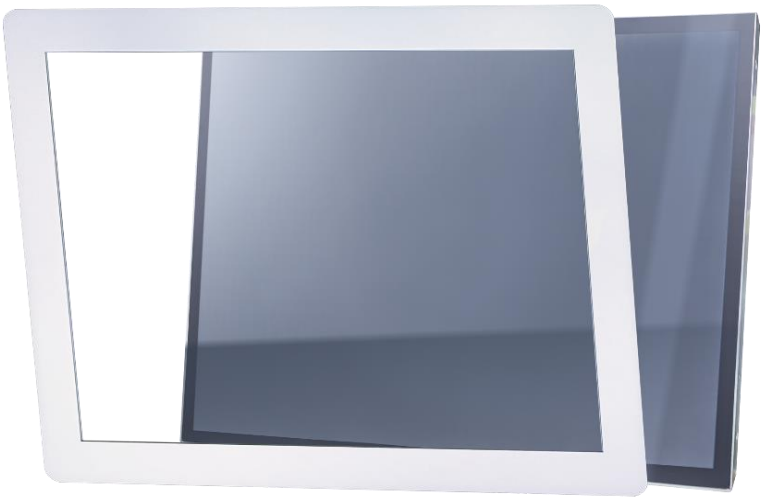

Dimension for Installing with Panel Mount Kits

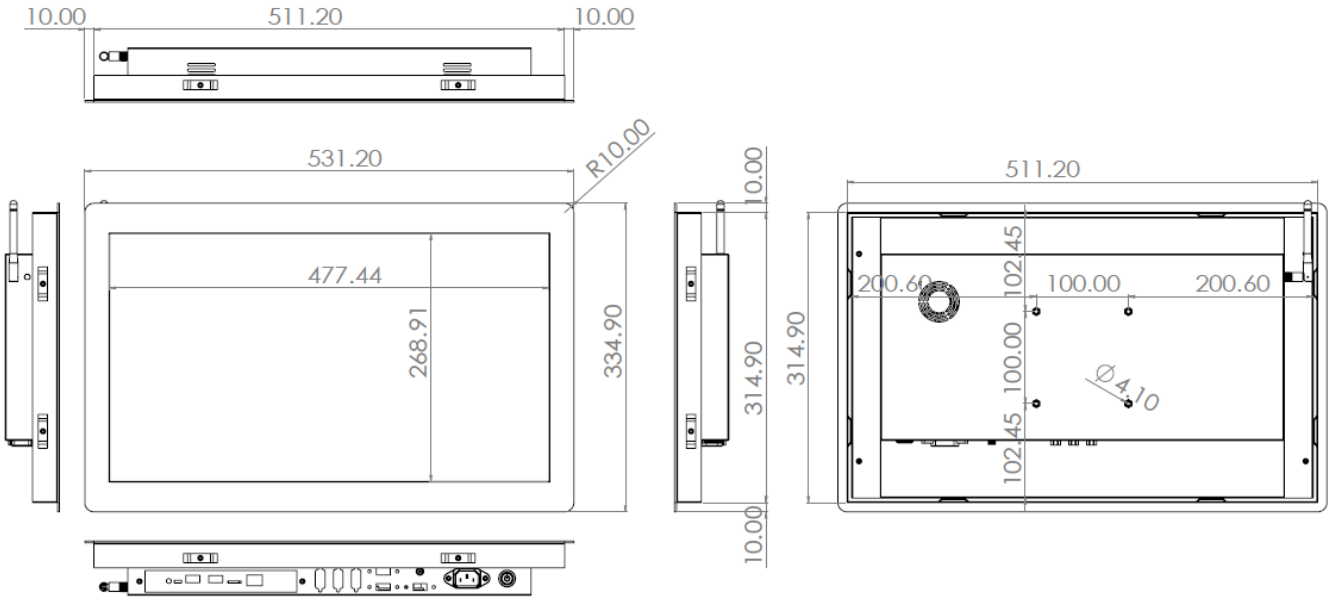

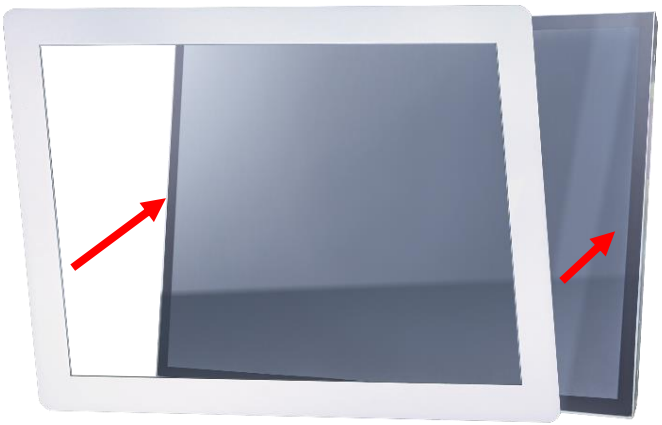

Step 1: Assemble the front module with the screen body. (This step is pre-assembled at the factory.)

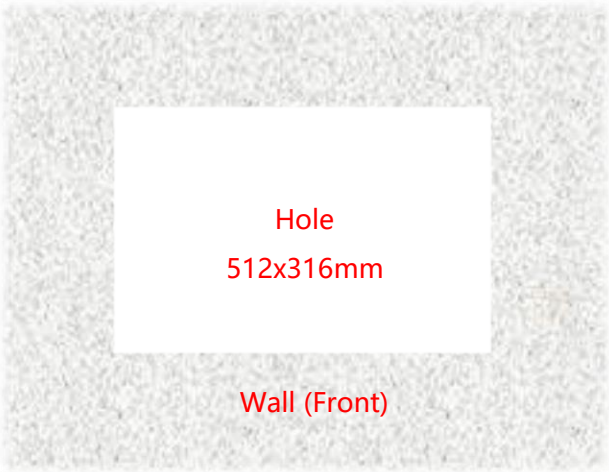

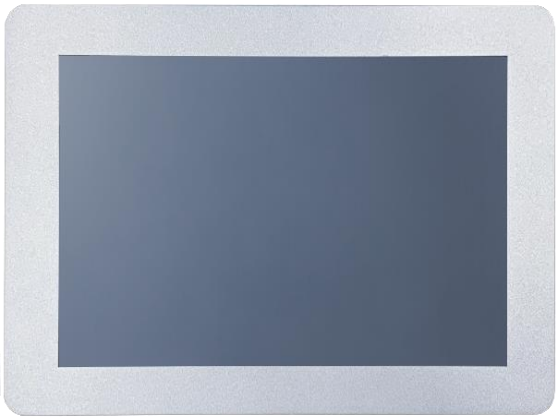

Step 2: Insert the screen from the front into the pre-cut opening.

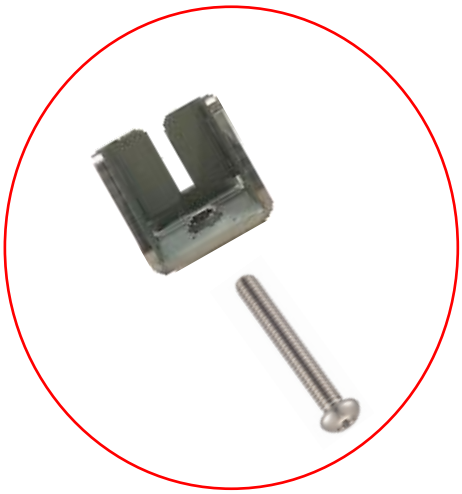

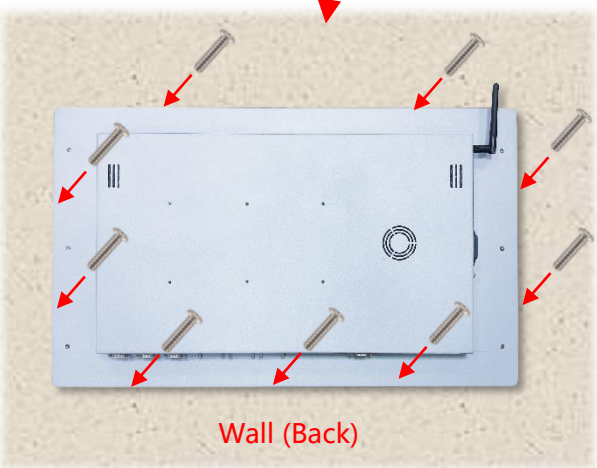

Step 3: Attach the clips from the back and secure with screws. (Up to 9 clips can be installed as needed or per positional limitations.)

Desktop Stand (Option)

Item	B Stand	Part No.	DST-0B002/DST-1B002
Mounting Pattern	100x100 / 75x75 mm	Dimension (WxHxD)	203x275x227 mm
Material	Steel/Plastic/Aluminum	Net Weight	1.8 KG
Tilt (Hinge)	-2° ~+180°	Support Max. Weight	15 KG

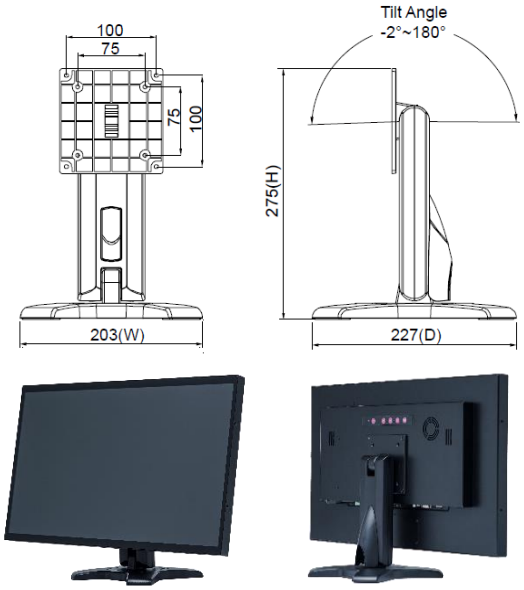

Item	Z Stand	Part No.	DST-0BZ01/DST-1BZ01
Mounting Pattern	100x100 / 75x75 mm	Dimension (WxHxD)	190x240x41.6
Material	SECC	Net Weight	2.6 KG
Tilt (Hinge)	±360°	Support Max. Weight	15 KG

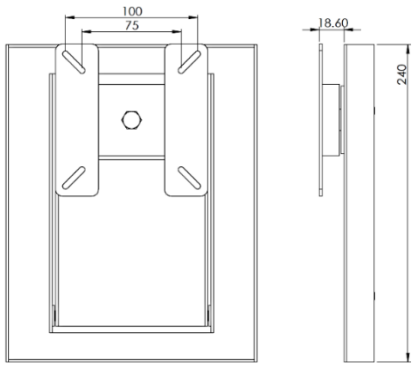

Wall Mount Bracket (Option)

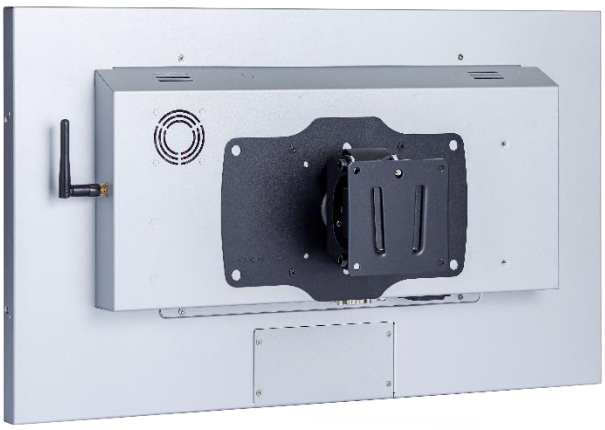

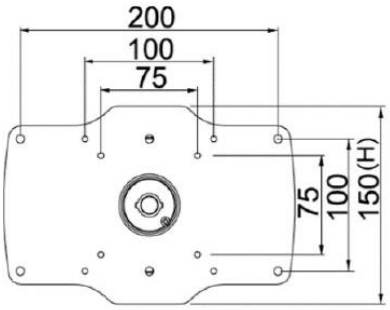

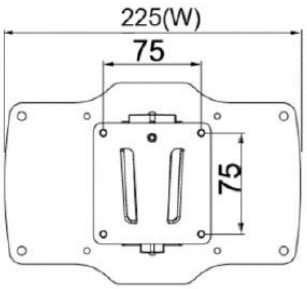

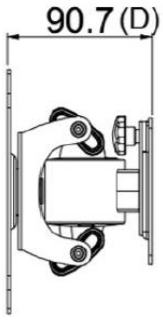

Packing Information

Unit Carton Size	**670x155x445 mm**
Unit N. Weight	**≦5.1 KG**
Unit G. Weight	**≦7.2 KG**
Units per Pallet	**30 units**
Pallet Size	**120x100x147 CM**

Physical Specifications

Dimension	**501.21x304.9x56(±2)mm**	Net Weight	**≦7.8 KG**
VESA Mounting	**100x100 mm**	Gross Weight	**≦10.1 KG**

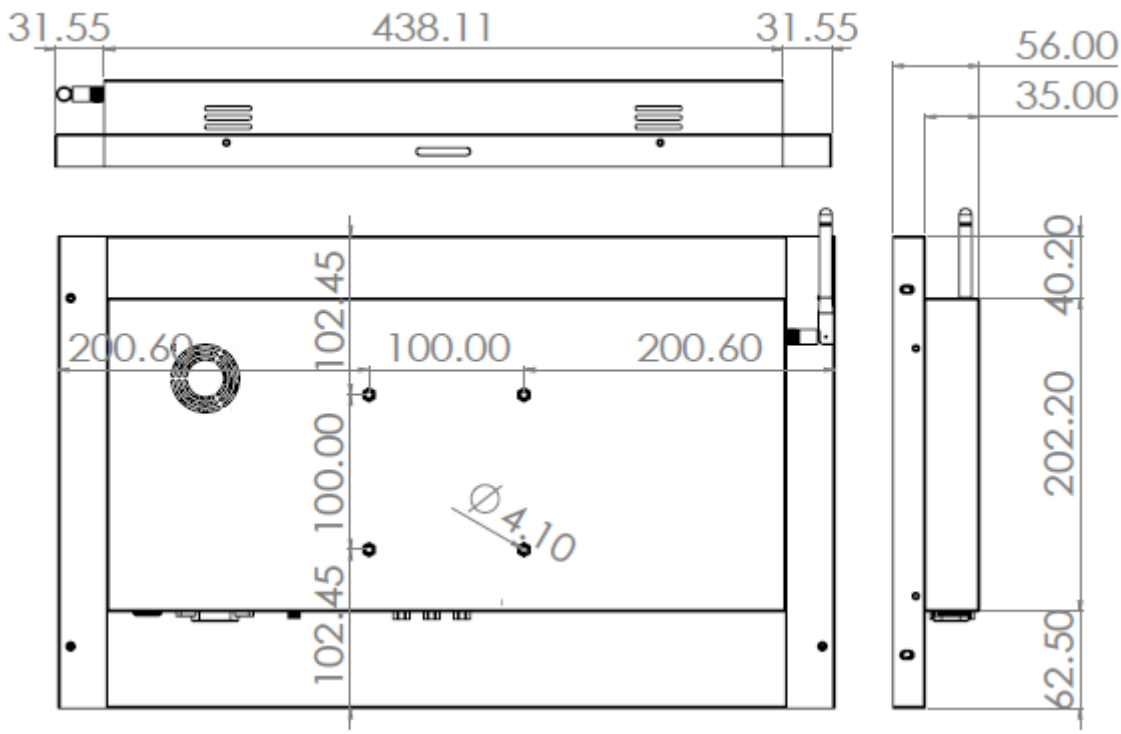

Cosmetic Inspection Standard

Display Area Allowance			
Defect description	**Defective Specifications**	**Allowance**	**Remarks**
Dot Defect (including dark dot, particles, bubbles, pits, dust, foreign matter)	D≦0.2mm	Ignored	D=Diameter
	0.2 < D≦0.7mm	N≦5	N=Quantity
	0.7 < D≦1mm	N≦3	
	D > 1mm	N≦0	
Linear Defect (including scratches, fluff, particles)	W≦0.15mm	Ignored	W=Width
	0.15 < W≦0.5mm, L≦15mm	N≦2	L=Length
	W > 0.5mm or L > 15mm	NG	

* Visual inspection distance: 60cm，90 degree (same for front/side/back)

Front Appearance Allowance (Including Coating)			
Defect description	**Defective Specifications**	**Allowance**	**Remarks**
Dot Defect (including particles, bubbles, pits...etc.)	D≦0.7mm	Ignored	D=Diameter
	0.7 < D≦1.5mm	N≦3	N=Quantity
	D > 1.5mm	N≦0	
Linear Defect (including scratches, fluff, particles)	W≦0.2mm, L≦15mm	Ignored	W=Width, L=Length
	0.2 < W≦0.7mm, L≦15mm	N≦1	
	W > 0.7mm or L > 15mm	NG	

Side / Back Appearance Allowance (Including Coating)			
Defect description	**Defective Specifications**	**Allowance**	**Remarks**
Dot Defect (including particles, bubbles, pits...etc.)	D≦1.5mm	Ignored	D=Diameter
	1.5 < D≦3mm	N≦8	N=Quantity
	D > 3mm	N≦2	
Linear Defect (including scratches, fluff, particles)	W≦0.8mm, L≦15mm	Ignored	W=Width, L=Length
	0.8 < W≦1.5mm, L≦15mm	N≦5	
	W > 1.5mm or L > 15mm	NG	

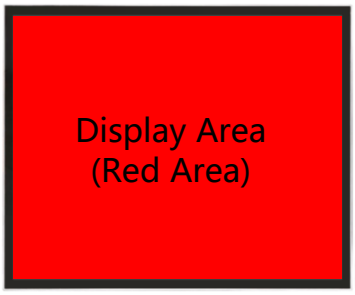

Front Appearance (Red Area)

Back Appearance